Impulse Converter

Contact-Protection-Relay

AD-KI 10 GX

Description

The contact protection pulse relay (switching amplifier, pulse shaper) serves preferably the protection of weak transducer contacts or the amplification of binary transducer signals. At the same time it transforms the prepared input signals into output pulses with constant, adjustable length. Typical input signals are reed contact signal transducers according to DIN-EN 60947-5-6 (NAMUR), voltage signals or resistance change. A heavy-duty and potential free contact is available at the output. In combination with a narrow 6.2 overall width, a high packing density is achieved.

Application

Pulse reception from water meters or flow monitors for measuring the flow rate. Amplification and contact protection of weak transducer signals (reed contacts, limit switches etc.), switching signal transfers in control circuits. Switching amplifiers for inductive and capacitive proximity switches according to Namur (DIN-EN 60947-5-6).

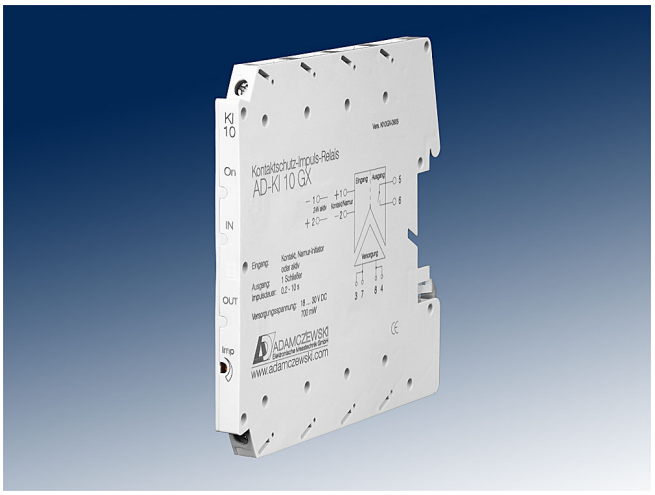

Business data

Order number

AD-KI 10 GX

Accessory

DIN-rail connector	AD-GX Connector

Information

Downloads

Safety instructions	ad-safety-instructions.pdf

Technical specifications

Impulse input

Namur supply voltage	~ 8,2 V DC
Logic level for Namur signals	Low / High: 2,1 mA / 1,2 mA
Logic level for active signals	Low / High: 9,5 V / 11,5 V
Max. input voltage	30 V DC
Reed contact	8 mA
Pulse width	1 ms ... infinite

Pulse processing

Output pulse length	0,2 ... 10 s

Relay output

Maximum switching load AC	250 V, 2 A
Maximum switching load DC	50 V, 2 A
Contact construction	potential-free closer
Switching operations mechanical	10000000
At 230V/2A AC, cos(phi)=1	600000
At 230V/2A AC, cos(phi)=0,4	200000
At 24V/1 A DC	200000

Supply

Voltage range DC	18 ... 30 V DC
Nominal voltage DC	24 V DC
Power consumption DC	700 mW

Housing

Dimensions (WxHxD)	6,2 x 92 x 101 mm³
Type of protection	IP 20
Connection method	screw clamp
Terminals, wire cross section	2,5 mm² flex wire / 4 mm² one wire
Bolting torque terminals	0,5 Nm
Weight	~ 70 g
Manner of fastening	DIN rail mounting 35mm, EN 50022

Environmental conditions

Ambient temperature	-10 ... 50 °C
Storage and transport	-10 ... +70 °C (no condensation)

EMC

Product family standard [1]	EN 61326-1
Emission [2]	EN 55011, CISPR11 Cl. A, Gr. 1

[1] During checking, slight signal deviations are possible.

[2] Warning:
This device is not intended to be used in residential areas and can not ensure adequate protection of radio reception in such environments.

Electrical safety requirements

Product family standard	EN 61010-1
Overvoltage category	II
Pollution degree	2

Galvanic isolation, test voltages

Signal / supply unit	1,5 kV, 50 Hz (1 min)
Reed contact	3 kV, 50 Hz (1 min)

Protection circuits

Input	electrical surge protection
Power supply	protection against over voltage, over temperature and reverse polarity

[1] During checking, slight signal deviations are possible.

SALES & ADVICE
GRUBATEC
MESS- UND REGELTECHNIK

MANUFACTURER
ADAMCZEWSKI
Elektronische Messtechnik

Grubatec AG · Wölferstrasse 5 · CH-4414 Füllinsdorf
+41 55 617 00 80 · info@grubatec.ch · www.grubatec.ch

Subject to technical changes and printing errors.

Impulse Converter

Contact-Protection-Relay

AD-KI 10 GX

Display and operating elements

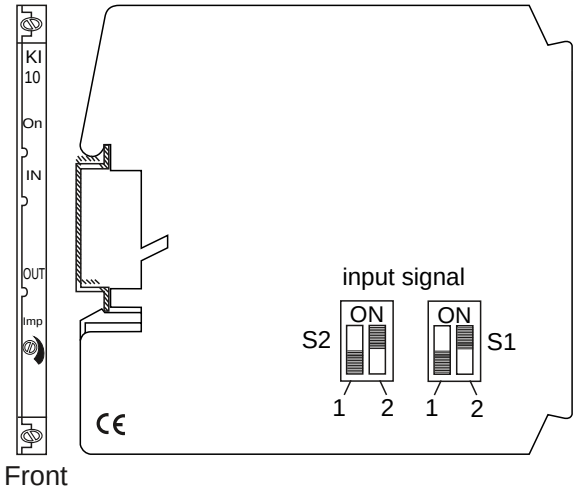

Front	Meaning
On	LED green, Power supply
IN	LED yellow, Input signal
OUT	LED red, Output state
Imp	Pulse time: 0,2 ... 10 s

Input signal	S2		S1	
	1	2	1	2
Contact	OFF	ON	OFF	ON
Namur	ON	OFF	OFF	ON
24 V	OFF	ON	ON	OFF

Block and wiring diagram

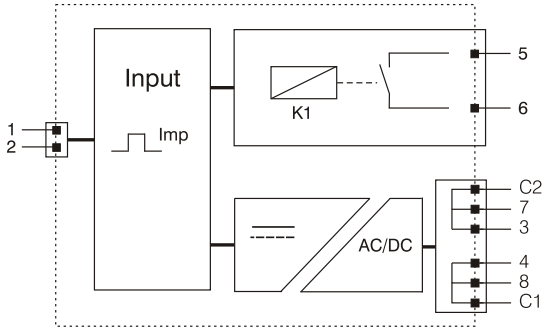

Encoder wiring at the input

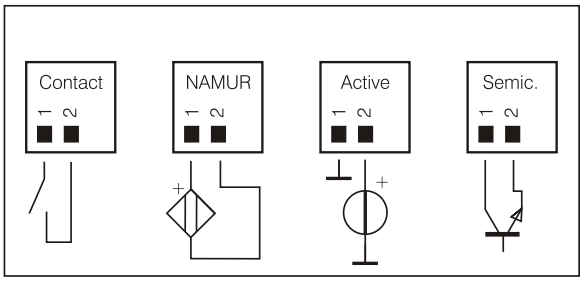

Dimensions

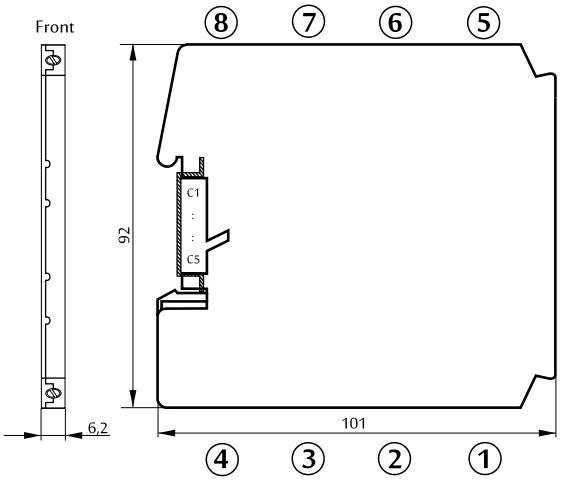

Grubatec AG · Wölferstrasse 5 · CH-4414 Füllinsdorf

+41 55 617 00 80 · info@grubatec.ch · www.grubatec.ch

Subject to technical changes and printing errors.

Contact-Protection-Relay

AD-KI 10 GX

Circuit examples

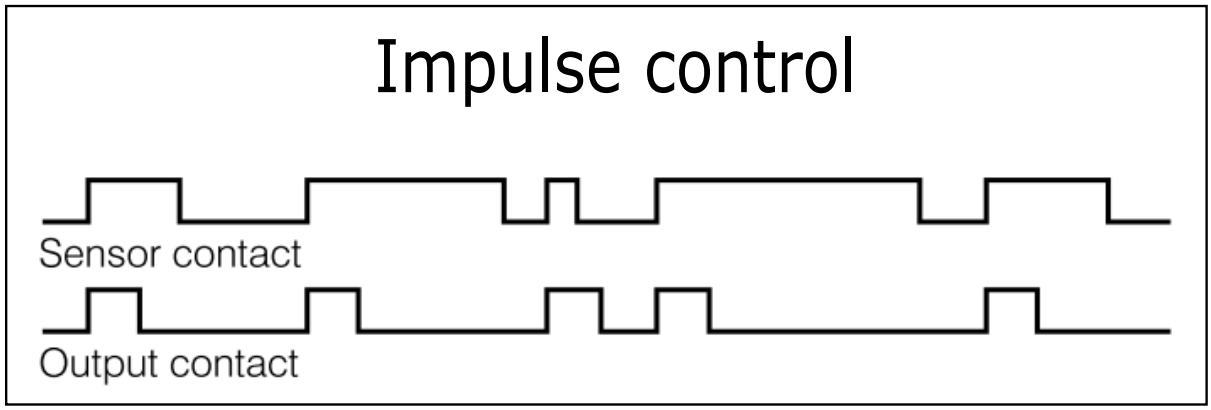

Subject to technical changes and printing errors.