Coupling Relays

AD-KR 11 GX
AD-KR 12 GX
AD-KR 22 GX

Description

The coupling relays of series AD-KR 11 GX, AD-KR 12 GX (1-channel) and AD-KR 22 GX (2-channel) serve the galvanic separation and amplification of contact messages by means of a 24V auxiliary voltage. At the front, the operating condition of the relay is indicated via a red illuminated diode. A free-wheeling diode and a reverse polarity protection are integral. Due to the narrow type of construction, with an overall housing width of only 6.2 mm, a high packing density is achieved.

Application

Galvanic separation and amplification of contact messages.



Business data

Order number

AD-KR 11 GX	1-channel, 1 changeover contact
AD-KR 12 GX	1-channel, 2 closing contact
AD-KR 22 GX	2-channel, 2 closing contact

Information

Downloads

Safety instructions	ad-safety-instructions.pdf

Technical specifications

Input

Nominal voltage	24 V DC
Voltage range	20 ... 30 V DC
Response time	6 ms
Fallback time	6 ms

Relay output

Maximum switching load AC	250 V, 2 A
Maximum switching load DC	50 V, 2 A
Switching capacity AC	< 100 VA
Switching capacity DC	< 100 W
Switching frequency	< 1 Hz
Switching operations mechanical	10000000
At 230V/2A AC, cos(phi)=1	600000
At 230V/2A AC, cos(phi)=0,4	200000
At 24V/1 A DC	200000

Contact construction

AD-KR 11 GX	1 potential-free changeover
AD-KR 12 GX	2 potential free contacts
AD-KR 22 GX	2 potential free contacts

Housing

Dimensions (WxHxD)	6,2 x 92 x 101 mm³
Type of protection	IP 20
Connection method	screw clamp
Terminals, wire cross section	2,5 mm² flex wire / 4 mm² one wire
Bolting torque terminals	0,5 Nm
Weight	~ 100 g
Manner of fastening	DIN rail mounting 35mm, EN 50022

Environmental conditions

Ambient temperature	-10 ... 50 °C
Storage and transport	-10 ... +70 °C (no condensation)

EMC

Product family standard	EN 61326-1
Emitted interference	EN 55011, CISPR11 Cl. B, Gr. 1

Electrical safety requirements

Product family standard	EN 61010-1
Overvoltage category	II
Pollution degree	2

Galvanic isolation, test voltages

Input to relay	1,5 kV, 50 Hz (1 min)
Relay to relay	1,5 kV, 50 Hz (1 min)

Protection circuits

Input	electrical surge protection

SALES & ADVICE
GRUBATEC MESS- UND REGELTECHNIK

MANUFACTURER
ADAMCZEWSKI Elektronische Messtechnik

Grubatec AG · Wölferstrasse 5 · CH-4414 Füllinsdorf
+41 55 617 00 80 · info@grubatec.ch · www.grubatec.ch

Subject to technical changes and printing errors.

Coupling Relays

AD-KR 11 GX
AD-KR 12 GX
AD-KR 22 GX

Display and operating elements

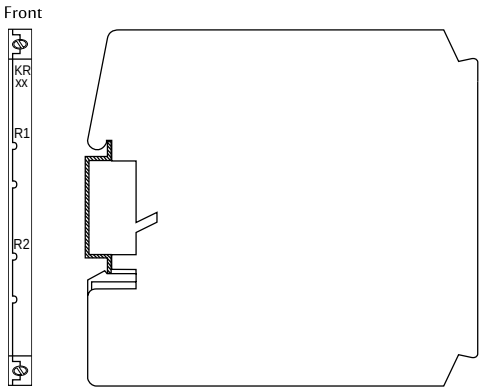

Designation	LED	Meaning
R1	red	Contact 1 state
R2	red	Contact 2 state

Block and wiring diagram

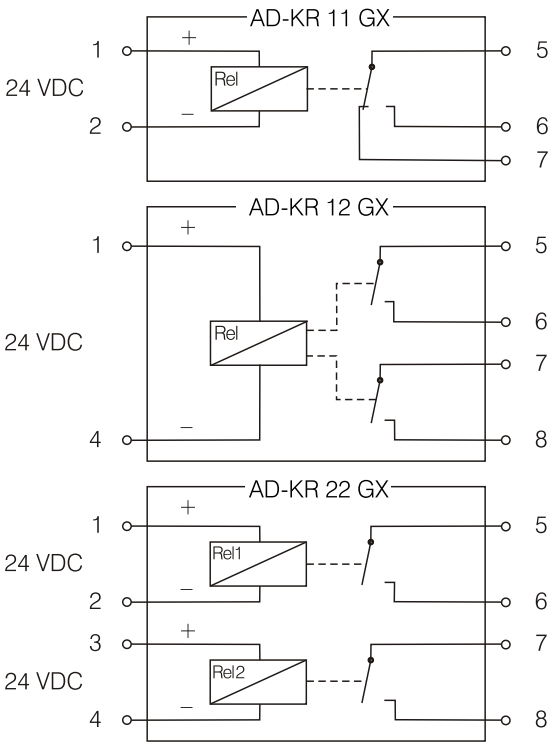

Dimensions

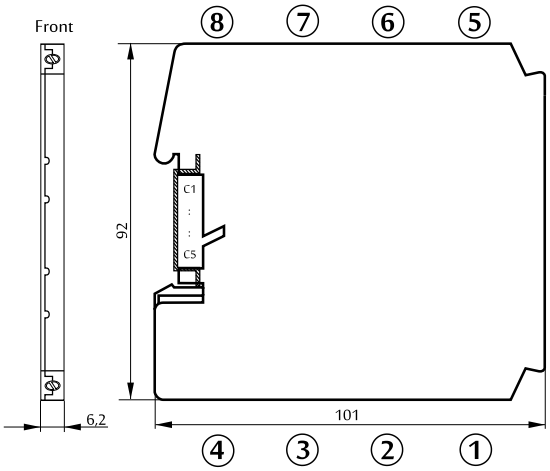

Subject to technical changes and printing errors.