Power Measurement

AD-LU 60 FE

Description

The AD-LU 60 FE is a measuring and indicator device for front panel fitting. It covers all measuring values in the three-phase network with neutral conductor. The current measuring is carried out via bushing current transformer at the device. The measuring values are shown on a graphic TFT display in colour and are distributed to different indicators. They can be leafed through manually or time-controlled automatic. A basic variant as purely indicator device and variants with modbus interface and digital outputs for counts or limiting values. Device parameterizing can be carried out via a menu at the device itself or via the optional RS-485 interface.

Application

Monitoring and indication of power in the units. Message if limiting values are exceeded, pulse output for energy count, interrogation of measuring values and counters via modbus.



Specific characteristics

- Connection of 3 phases with neutral, any load
- Measurement of P1, P2, P3, Ptot, Q1, Q2, Q3, Qtot, S1, S2, S3, Stot, I1, I2, I3, U1 U2, U3, F, PF1, PF2, PF3, PFtot, harmonics
- Low power loss in the current measurement by integrated through current transformer
- Display of measured values on a graphic TFT display
- Counter for the total absorbed / backfed active energy and inductive / capacitive reactive power
- Two switching output optocouplers with configurable functions as limit or S0 (device variants D, -DB)
- RS-485 interface with Modbus-RTU to read out the measured values and to configure the device parameters (device variants -B, -DB)

Business data

Order number

AD-LU 60 FE	Basic device without additional functions
AD-LU 60 FE-D	with 2 open collector outputs
AD-LU 60 FE-B	with Modbus RTU interface
AD-LU 60 FE-DB	with 2 open collector outputs and Modbus RTU interface

Information

Downloads

Instruction manual	man-lu60fe-ad-en.pdf
Tender text	lu60fe.zip
Safety instructions	ad-safety-instructions.pdf

Technical specifications

Current inputs

Measuring ranges	0 ... 1/5/20 A AC
Maximum wire diameter	4,8 mm²

Voltage inputs/supply

Nominal voltage	230 V AC
Rated frequency	50 Hz
Frequency range	40 ... 100 Hz
Measuring range	80 ... 253 V AC
Max. power consumption	4 VA

RS485 interface (-B, -DB)

Software protocol	Modbus-RTU
Data format	19200, e, 8, 1
Max. bus users	32
Max. length of bus	500 m (no stubs)
Cable	twisted and shielded

Optocoupler outputs (-D, -DB)

Max switching voltage, switching current	30 V DC, 50 mA DC

Display

Type	TFT
Resolution	320x240 Pixel

Accuracy

Class	0,5
Temperature influence	100 ppm/K

Housing

Dimensions (WxHxD)	96x96x64 mm
Front panel cut out (bxh)	92x92 mm
Dimensions front	IP 54
Type of protection housing	IP 20
Connection method	screw clamp
Terminals, wire cross section	2,5 mm² flex wire / 4 mm² one wire
Weight	~ 250 g
Manner of fastening	panel-mounting

Environmental conditions

Ambient temperature	-10 ... 50 °C
Storage and transport	-10 ... 70 °C (no condensation)

SALES & ADVICE
GRUBATEC MESS- UND REGELTECHNIK

MANUFACTURER
ADAMCZEWSKI Elektronische Messtechnik

Grubatec AG · Wölferstrasse 5 · CH-4414 Füllinsdorf
+41 55 617 00 80 · info@grubatec.ch · www.grubatec.ch

Subject to technical changes and printing errors.

Power Measurement

AD-LU 60 FE

Technical specifications

EMC

Product family standard	EN 61326-1 [1]
Emitted interference	EN 55011, CISPR11 Cl. B, Gr. 1

Electrical safety requirements

Product family standard	EN 61010-1
Overvoltage category	II
Pollution degree	2
Safety measurement	EN 61010-2-030
Measurement category	CAT III

Galvanic isolation, test voltages

Grid side to RS485-Bus	4 kV, 50 Hz (1 min.)
Grid side to control elements	4 kV, 50 Hz (1 min.)

Protection circuits

Voltage inputs	PTC resistor
RS485-Bus	electrical surge protection
Optocoupler outputs	electrical surge protection

[1] During checking, slight signal deviations are possible.

Block and wiring diagram

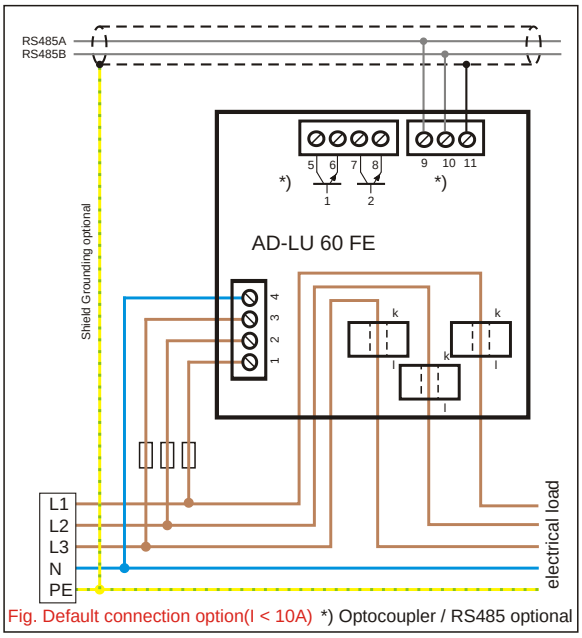

Fig. Default connection option(I < 10A) *) Optocoupler / RS485 optional

Dimensions

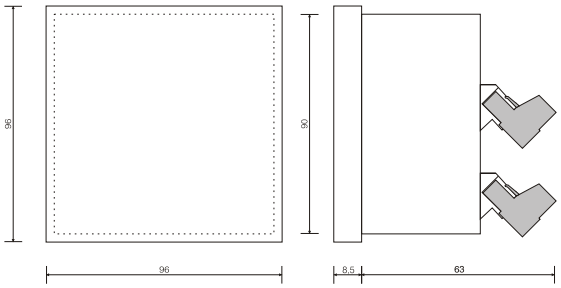

Subject to technical changes and printing errors.