ADAMCZEWSKI
Elektronische Messtechnik GmbH

Power transducer

AD-LU 60 FE
AD-LU 60 FE-D
AD-LU 60 FE-B
AD-LU 60 FE-DB

Operating manual



Version 1.1, Issue 2017-01-17, Production

SALES & ADVICE
GRUBATEC
MESS- UND REGELTECHNIK

MANUFACTURER
ADAMCZEWSKI
Elektronische Messtechnik

Grubatec AG · Wölferstrasse 5 · CH-4414 Füllinsdorf
+41 55 617 00 80 · info@grubatec.ch · www.grubatec.ch

Subject to technical changes and printing errors.

Contents

1 About this manual **4**
- 1.1 Structure of notes . . . 4

2 Safety **5**
- 2.1 Intended Use . . . 5
- 2.2 Foreseeable misapplication . . . 5
- 2.3 Safe handling . . . 5
- 2.4 Qualification of staff . . . 6
- 2.5 Changes to the product . . . 6
- 2.6 Use of spare parts and accessories . . . 6
- 2.7 Liability notes . . . 6

3 Product description **7**
- 3.1 Scope of delivery . . . 7
- 3.2 Features . . . 7
- 3.3 Ordering code . . . 8
- 3.4 How it works . . . 8
- 3.5 Update rates . . . 9
- 3.6 Behavior of the device in the event of a fault . . . 9
- 3.7 Display and control elements . . . 9

4 Technical specifications **10**
- 4.1 Current inputs . . . 10
- 4.2 Voltage inputs . . . 10
- 4.3 Digital outputs . . . 10
- 4.4 RS-485 Interface . . . 11
- 4.5 Accuracy . . . 11
- 4.6 Casing . . . 12
- 4.7 Environmental conditions . . . 12
- 4.8 EMC, safety regulations, product standard . . . 12
- 4.9 Galvanic isolation, test voltages . . . 13

5 Installation and commissioning **14**

6 Operation **15**
- 6.1 Displays . . . 15
- 6.2 Menue . . . 17

7 Configuration **18**
- 7.1 Symbols . . . 18
- 7.2 Parameters . . . 18
  - 7.2.1 Current and voltage transformers . . . 19
  - 7.2.2 Filter . . . 19

SALES & ADVICE

GRUBATEC MESS- UND REGELTECHNIK

MANUFACTURER

ADAMCZEWSKI Elektronische Messtechnik

Grubatec AG · Wölferstrasse 5 · CH-4414 Füllinsdorf
+41 55 617 00 80 · info@grubatec.ch · www.grubatec.ch

Subject to technical changes and printing errors.

7.2.3 Digital function at AD-LU 60 FE-D, AD-LU 60 FE-DB 20
7.2.4 RS-485 Interface 21
7.2.5 Options 21

8 Modbus **23**
8.1 General information 23
8.2 Data format 23
8.3 Data types 24
8.4 Supported functions 24
8.4.1 Read Holding Registers 24
8.4.2 Write Multiple Registers 25
8.5 Exception Codes 25
8.6 Data lists 26
8.6.1 Measured values 26
8.6.2 Counter 27
8.6.3 Digital outputs 27

9 Connection diagram **28**

10 Appendix **30**
10.1 Maintenance and Service 30
10.2 Disturbances 30
10.3 Revisions 30
10.4 Addresses 30

1 About this manual

This manual is part of the product.

- Be sure to read the operating instructions before using the product.
- Keep the operating manual for the entire life of the product and keep it ready for reference.
- Pass the manual to each subsequent owner or user of the product.

1.1 Structure of notes

INFO



General note

Highlighting special instructions and information that are necessary for operation of the product.

WARNING



Warning note

Possible damage to the device or risk of injury if the instructions are not observed.

HAZARD



Hazard statement

Possible damage to the device, risk of injury or life if the instructions are not observed.

2 Safety

2.1 Intended Use

WARNING



Damage to property

The operating and maintenance conditions in this manual must strictly adhere.

Any other use is not intended! Unauthorized modifications and modifications to the product lead to considerable safety risks and are prohibited for safety reasons! Adamczewski elektronische Messtechnik GmbH shall not be liable for any damage resulting from this or for damages resulting from the non-intended use.

Malfunctions that can affect safety are to be rectified immediately! The installer must make the operating instructions accessible to the operator. Installer and operator must have read and understood the operating instructions before beginning their work.

2.2 Foreseeable misapplication

This product may not be used in any of the following cases:

- In explosive atmosphere. Operating in potentially explosive atmospheres may result in sparks, fire or explosions.
- Use on humans and animals.

2.3 Safe handling

This product complies with the state of the art and the recognized safety regulations. Each unit is tested to verify functionality and safety.

Operate this product only in perfect condition, taking into account the operating instructions, the usual regulations and guidelines as well as the applicable safety regulations and accident prevention regulations.

Extreme environmental conditions affect the function of the product.

- Protect the product from shocks
- Use only in indoor areas
- Protect from moisture

2.4 Qualification of staff

Installation, commissioning, operation, maintenance and disposal may only be carried out by qualified personnel. Work on electrical parts may only be carried out by a trained electrician in accordance with the applicable regulations and Guidelines.

2.5 Changes to the product

Unauthorized modifications to the product can lead to malfunctions and are prohibited for safety reasons.

2.6 Use of spare parts and accessories

Use of unsuitable spare parts and accessories may damage the product. Please use only original spare parts and accessories from the manufacturer.

2.7 Liability notes

The manufacturer assumes no liability or guarantee for damage and consequential damage caused by non-observance of the technical regulations, instructions and recommendations. The manufacturer and the sales company are not liable for any costs or damages caused to the user or to third parties by the use of this device, especially if the device is used improperly, misused or interfered with the connection, faults of the device or of the connected devices. For non-intended use adheres neither the manufacturer nor the sales company.

3 Product description

The AD-LU 60 FE and its variants is a measurement and display unit for front panel mounting. It measures all values in the three-phase network with neutral conductors. For correct measurement, the current must be detected in each phase directly or via a current transformer. See chapter ??. The power cables must be looped to the device via a plug-in current transformer.
The measured values are displayed in color on a graphical TFT display and are divided into different displays. They can be scrolled through manually or time-controlled.
There is a basic variant as a pure display device and variants with Modbus interface and digital outputs for counting pulses or limit values.
The device parameters such as the currents of the connected current transformers can be achieved via a menu on the device itself or via the optional RS-485 interface.

3.1 Scope of delivery

- AD-LU 60 FE or one of the variants -D, -B or -DB
- This manual

3.2 Features

- Connection of 3 phases with neutral conductor, any load
- Measurement of P1, P2, P3, Ptot, Q1, Q2, Q3, Qtot, S1, S2, S3, Stot, I1, I2, I3, U1, U2, U3, F, PF1, PF2, PF3, PFtot
- Low power loss during current measurement thanks to integrated through-current transformers
- Display of measured values on a graphical TFT display
- Counters for the total applied / back-fed active energy and inductive / capacitive reactive power
- Two switching outputs as optocouplers with configurable function as limit value or S0 (device variants -D, -DB)
- RS-485 interface with Modbus-RTU protocol for reading the measured values and configuring the device parameters with the Configuration program AD-Studio (device variant -B, -DB)

3.3 Ordering code

Device variant	TFT-Display	Digital Outputs	RS-485, Modbus/RTU
AD-LU 60 FE	•	-	-
AD-LU 60 FE -D	•	•	-
AD-LU 60 FE -B	•	-	•
AD-LU 60 FE -DB	•	•	•

3.4 How it works

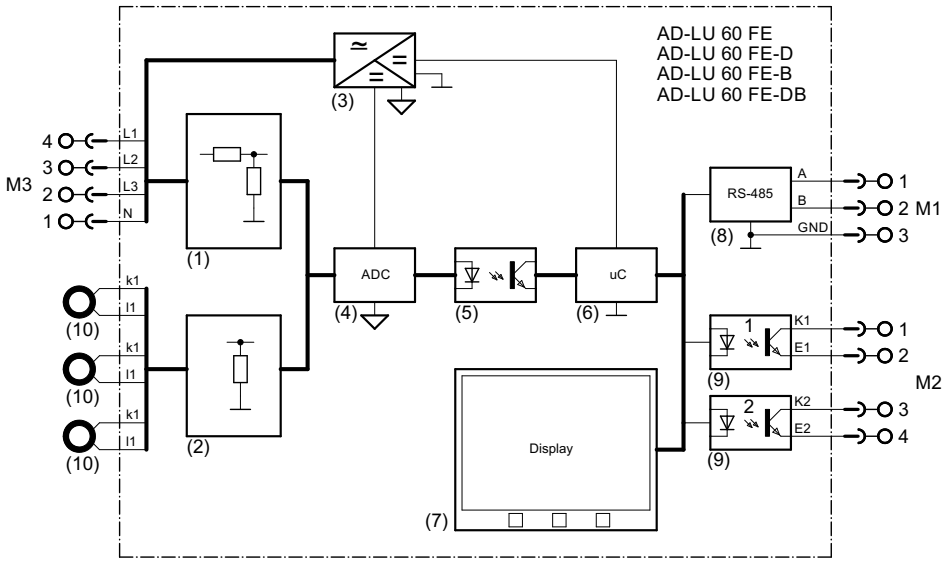

The measuring voltages are divided by a voltage divider (1) and fed to the analog-to-digital converter (4). The AC/DC converter (3) is simultaneously fed from the measuring voltages. The AC / DC converter (3) supplies the analog-to-digital converter (4) on the input side and the circuits on the output side.

The currents are first fed via the ring core current transformer (10) present on the outside of the device. The mA signals on the secondary side are measured via shunts (2) and are also fed to the analog-to-digital converter (4).

The analog-to-digital converter (4) transmits all raw data to the output side via a galvanic separation (5). Here, they are scaled by the microcontroller (6) to the power values, currents, voltages, etc. The scaled values are displayed on the display (7). For the device variants with RS-485 interface (8), these values can also be read out via the Modbus protocol. With the device variants with open-collector output (9), limits

or pulses can also be output.

3.5 Update rates

All measured values are recorded in a fixed time interval of 0.5s. The display output is updated once per second.

3.6 Behavior of the device in the event of a fault

The AD-LU 60 FE verifies whether the signal voltage is present on phase L1. If this is not the case, the AD-LU 60 FE goes into the error state. The device variants AD-LU 60 FE-D, AD-LU 60 FE-DB switch off their outputs, ie the transistors are not conductive.

3.7 Display and control elements

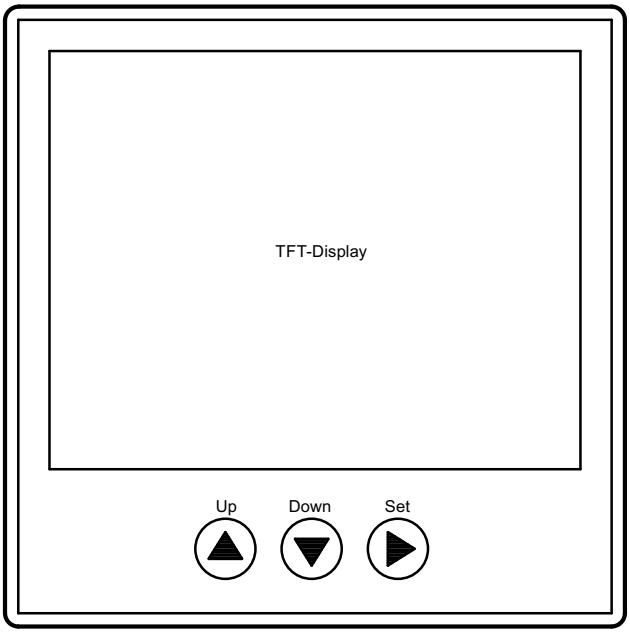

The AD-LU 60 FE has a color-coded TFT display for displaying the data and three buttons for operation and configuration.

4 Technical specifications

4.1 Current inputs

Description	Value	Unit
Rated current ranges	0 ... 1/5/20 [1]	A AC
Maximum conductor diameter	4,8	mm

[1] Currents up to 20A can be measured directly with the straight-through transformer of the device.

4.2 Voltage inputs

Description	Value	Unit
connections	L1, L2, L3, N	
Rated voltage range	80 ... 253	V AC, L-N
Impact overload	600	V AC, 1s, L-N
Input resistor	500	kΩ

INFO



Connection of the neutral conductor
The AD-LU 60 FE is designed for connection to 3-wire networks with neutral conductor. If the neutral wire is not connected, the device will not work properly.

4.3 Digital outputs

The variants AD-LU 60 FE-D, AD-LU 60 FE-DB also have two open-collector outputs.

Description	Value	Unit
Number, type	2, NPN	
Switching voltage	5 ... 30	V DC
Maximum switching current	50	mA DC
Short circuit proof	no	
Reverse polarity protected	no	

INFO



Polarity reversal or overload
The switching outputs of the AD-LU 60 FE-D, AD-LU 60 FE-DB are not protected against polarity reversal and overload. A wrong auxiliary voltage or a too high switching current can lead to the destruction of the output.

4.4 RS-485 Interface

The variants AD-LU 60 FE-B, AD-LU 60 FE-DB also have an RS-485 interface.

The connection to the other devices must be established via a twisted shielded bus cable. The order of the devices among each other is arbitrary. For reasons of electromagnetic compatibility, the shield is to be connected at both ends to a large area and to be connected with a protective shield. The wiring must be in a bus structure. Stops longer than 5 m should be avoided. The two ends of the bus line must be terminated with a resistance of 120 ohms, especially with longer bus lines.

If the device is to be operated in a bus segment that already has devices other than Modbus slaves, the baud rate, parity and slave address may need to be adjusted. These settings can be made directly from the device menu.

Description	Value	Unit
Standard	RS-485	
Baudrate	2400, 4800, 9600, 14400, (19200), 28800, 38400, 57600, 76800, 115200	bps
Databits	8	
Parity[1]	(even), odd, none	
Protocol	Modbus-RTU	
Max. Leitungslänge	1200	m

[1] Without parity bits, two stop bits are output automatically.

4.5 Accuracy

Description	Value	Unit
Accuracy class [1]	0,5	%
Temperature Influence	+/-200	ppm/K
Frequency influence	0,2	%, 40 ... 60 Hz
Influence of phase angle	0,2	%, 0 ... 90°

[1] Under reference conditions

4.6 Casing

Description	Value	Unit
Type of housing	Switchboard housing acc IEC 61554	
Housing size HxBxT	96 x 96 x 44	mm
Control panel cutout	92(+0,8) x 92(+0,8)	mm
Protection class	IP20	
Connection technology	Screw terminals, pluggable	
Cross-section	2,5 4	mm^2, Fine-stranded mm^2, Solid
Weight	350	g

4.7 Environmental conditions

Description	Value	Unit
Overvoltage category	300 V CAT III	
Degree of pollution	2	
Protection class	II [1]	
Ambient temperature	0...50	°C
Transport and Storage	-10...70	°C

[1] No protective conductor.

4.8 EMC, safety regulations, product standard

Description	Value	Unit
Discharge of static electricity	IEC 61000-4-2	
Electromagnetic fields [1]	IEC 61000-4-3	
Fast transients, Burst	IEC 61000-4-4	
Surge voltages, Surge	IEC 61000-4-5	
Conducted RF signals	IEC 61000-4-6	
Interference emission	EN55011, CISPR11 Klasse B, Wohnbereich	
Safety regulations	EN61010-1	
Product family standard	EN 60688	

[1] Low signal deviations are possible during interference.

4.9 Galvanic isolation, test voltages

Description	Value	Unit
Measurement inputs to RS-485	4	kV, 1 Min.
Measuring inputs for open collector outputs	4	kV, 1 Min.
RS-485 to open-collector outputs	4	kV, 1 Min.

5 Installation and commissioning

HAZARD



Danger to life by electric shock

The terminals of the voltage inputs are hazardous to contact.

- Disconnect power supply
- Check absence of voltage
- Insert the device into the intended opening of the front panel
- Connect the power inputs and RS-485 interface
- Lead current carrying wires by the current transformer on the rear panel
- Switch on the voltage
- Configure the device from the menu or Configuration program AD-Studio
- Check function
- Disconnect power supply
- Connect digital outputs [1]
- Reconnect power supply
- Check current through the current transformers

[1] The Open-Collector outputs should be connected after the function test in order to avoid unwanted switching or fault messages.

INFO



Observe the current conductor K/L via the current transformers

When passing through the current transformers on the rear side, the energy flow direction from K to L must be taken into account. K = infeed side, L = load side. See also the chapter ??. If you do not have a PV system installed that feeds energy back into the grid, all the active powers must be positive. Please check this in the relevant display. When e.g. The value for the active power in L2 is negative, the current conductor for I2 is probably wrongly inserted by the current transformer.

6 Operation

There are basically the operating modes Display and Menu. When switched on, the AD-LU 60 FE is always in display mode.

From the display mode, press 'Set (long)' to enter the menu. In the menu you can also return to the display mode by pressing the 'Set (long)' key again or by selecting '<<' from the main menu.

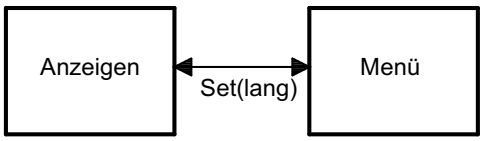

6.1 Displays

During operation, you can scroll through the displays with the 'Up', 'Down' and 'Set' buttons.

Use the 'Up' / 'Down' keys to change the display level of the displayed values.

Press the 'Set' key to scroll between the instantaneous values, the filter values, the min values and the max values of the display levels. The function is circulating, that is, the instantaneous values return to the max values.

INFO

Filter, min and max values

Filter values are displayed in the header with the red reference text 'AVG' for 'Average'. A red 'MIN' or 'MAX' appears for the min and max values. There are no sensible filter min- or max-values for the meters.

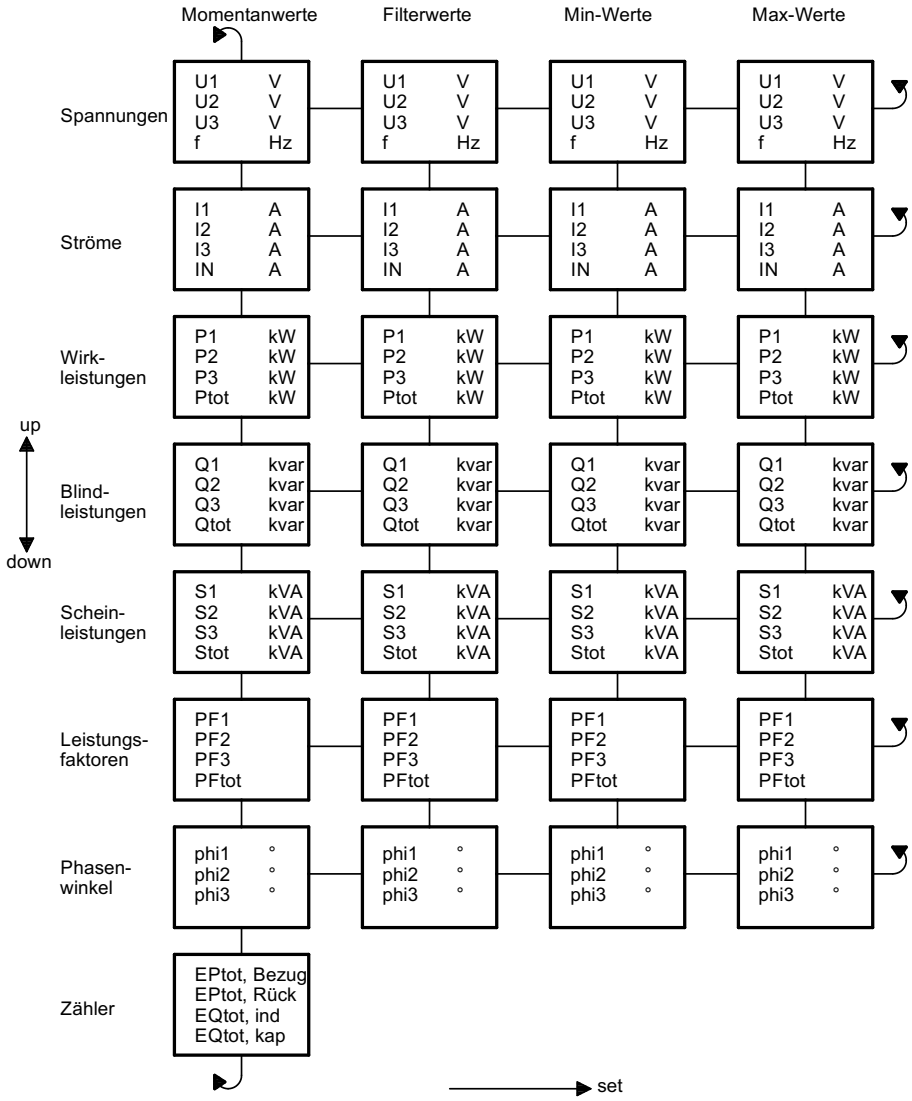

6.2 Menue

The device parameters can be changed in the menu. For a detailed description of the parameters, see 7.2

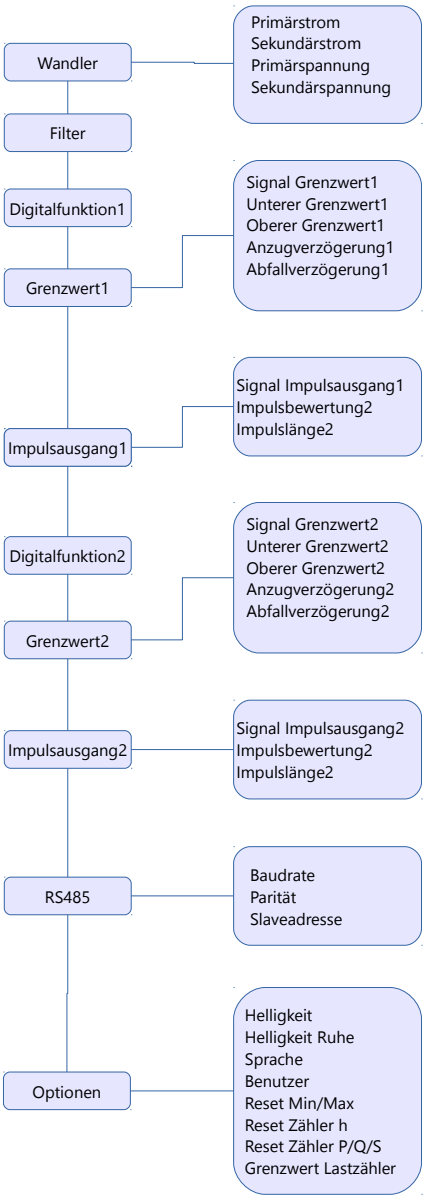

7 Configuration

The parameters of the AD-LU 60 FE-B, AD-LU 60 FE-DB in chapter 7.2 can be selected via the device menu itself or with the Configuration program AD-Studio . The values in the chapter ??. Can be read, viewed or logged. This can be very helpful especially during commissioning.

For the AD-LU 60 FE and the AD-LU 60 FE -D, the parameters can only be set on the device menu itself.

7.1 Symbols

The following symbols are used.

P1 ... P3 Active powers in phases L1 ... L3 in kW.

Q1 ... Q3 Reactive powers in phases L1 ... L3 in kvar.

S1 ... S3 Apparent powers in the phases L1 ... L3 kVA.

Ptotal Total active power in phases L1 ... L3 in kW.

Qtotal Total reactive power in phases L1 ... L3 in kvar.

Stotal Total apparent power in phases L1 ... L3 kVA.

I1 ... I3 Currents in phases L1 ... L3 in A.

U1 ... U3 Voltages in the phases L1 ... L3 in V.

F Frequency in phase L1 in Hz.

PF1 ... PF3 Power factor in phases L1 ... L3. $PFn = |Pn|/Sn$.

PFtotal Power factor of the entire phases in the network. $PF_{total} = |P_{total}|/S_{total}$.

7.2 Parameters

This is followed by a reference to the parameter that can be changed via the menu on the device or by the Configuration program AD-Studio . The table columns have the following meaning.

Name Parameter name as found in the configuration program.

Default value In the delivery state and after setting the factory settings, the parameter has this value.

Valid Range Limits for the smallest and largest input value. For lists, a list of all elements.

Unit Physical unit of the value.

Comments Comments or explanations.

7.2.1 Current and voltage transformers

The current and voltage converters, which are connected to the AD-LU 60 FE , are taken into account in the calculation of the currents, voltages, power and counter and must be known.

Name	Default	Range	Unit
Primary current	5	1 ... 10000	A
Secondary current	5	1 ... 20	A
Primary voltage	230	50 ... 500000	V
Secondary voltage	230	50 ... 500	V

7.2.2 Filter

All measured values are filtered. The larger the filter number, the higher the effect of the attenuation. Each measured value is filtered according to the following relationship.

$$M_t = M_{t-1} + \frac{M_t - M_{t-1}}{F}$$

where

- M_t Measured value at time t.
- M_{t-1} Measured value at time t-1, ie the last measured value.
- F Value of the filter number.

A filter number of 1 returns the current measured value unfiltered. A filter number of 2 gives the arithmetic mean value between the current and the last measured value.
The measured values are cyclically filtered. The attenuation depends on the cycle time and the filter number. The timing is explained in chapter **??**.
The relationship between settling time, cycle time and filter number is

$$t_{90} = F * 2,26 * t_z$$

where

- t_{90} Settling time of the filtered measured value to 90 % with a signal change in the input from 0 to 100 %.
- t_z Cycle time in seconds.

The desired settling time t_{90} can be entered directly in seconds as a parameter for filtering the signals. The AD-LU 60 FE calculates the filter number from the settling time and the sampling rate itself.

Name	Default	Range	Unit
T90	900	1 ... 3600	s

7.2.3 Digital function at AD-LU 60 FE-D, AD-LU 60 FE-DB

The digital outputs n = 1 ... 2 can be used with various functions. The function is disabled by default.

Name	Default	Range	Unit
Digital function[n]	off	off, Limit, S0	

Digital function 'Limit'

The following parameters apply to the digital function 'limit value'. The parameter 'Signal source' selects the input signal to which the limit values are set. The output is activated when the upper limit is exceeded and deactivated when the lower limit is fallen below.

Name	Default	Range	Unit
Signal source[n]	Ptotal	Ptotal, Qtotal, Stotal, PFtotal, U1, U2, U3, IN, I1, I2, I3, F, phi1, phi2, phi3	
Lower Limit[n]	1	-1E6 ... 1E6	[1]
Upper Limit[n]	2	-1E6 ... 1E6	[1]
ON delay[n]	0	0 ... 3600	s
OFF delay[n]	0	0 ... 3600	s

[1] The unit depends on the selected source, so as 'KW'.

Digital function 'S0'

The following parameters apply to the digital function 'S0'. With this function, energy pulses are output.

Name	Default	Range	Unit
Signal source[n]	Counter P obtain	Counter P obtain Counter P return Counter Q ind Counter Q cap Counter S	
Pulse value[n]	1	0,001 ... 1000	kWh/Imp, kvarh/Imp or kVA/Imp [1]
Pulse length [n]	0,25	0,1 ... 10	s

[1] The unit of the pulse value depends on which counter has been selected as the signal source.

7.2.4 RS-485 Interface

Applies to the variants AD-LU 60 FE-B, AD-LU 60 FE-DB .

If adjustments to the interface are necessary, the following parameters may be used. 8 data bits are always transmitted. The number of stop bits can not be changed. It is 1 with even and odd parity bit and 2 without parity bit. This means that the bit protocol always contains 11 bits. The slave address is stored in the configuration data area and remains after a firmware update.

Name	Default	Range	Unit
Baudrate	19200	2400, 4800, 9600, 14400, 19200, 28800 38400, 57600 76800, 115200	bps
Parity	even	even, odd, none	
Slave address	1	1 ... 247	

7.2.5 Options

Various general options can be selected.

Name	Default	Range	Unit
Brightness	50	5 ... 100	%
Brightness idle	10	5 ... 100	%
Language	DE	DE, EN	
User	Standard	Admin, Standard	
Reset Min/Max	50	5 ... 100	%
Reset Counter h	50	5 ... 100	%
Reset Counter P/Q/S	50	5 ... 100	%
Limit Load Counter	0,1	0 ... 100	kW

The brightness and the language are saved in the configuration data area and are retained after a firmware update.

The display will be lowered to the 'Brightness idle' parameter after approximately three minutes without pressing a button. If the display always has the same brightness, the parameters 'Brightness' and 'Brightness idle' must have the same value.

The user is only temporarily stored until the next start of the device or the user changes again. Some device parameters can only be changed by a specific user group. If this is the case, the parameter is noted. The change of user group is not protected by a password. It is used to assign individual parameters to a specific user group and to protect against unintended changes.

With the 'Reset Min/Max' function, all Min and Max values are reset to the current measured value.

The operating hours counter and load hour counter are reset to 0 with the 'Reset counter h' function.

With the 'Reset counter P/Q/S' function, all counters are reset to 0 for the total active energy, reactive energy and apparent energy.

The parameter 'Limit Load Counter' specifies the minimum total active power from which the load hours are counted. With this counter, for example, the operating hours of an engine can be counted.

8 Modbus

8.1 General information

Applies to the variants AD-LU 60 FE-B, AD-LU 60 FE-DB , in the following explanations for the sake of simplicity called 'Slave'.

The data is transferred via the Modbus-RTU protocol (RTU = remote terminal unit), the AD-LU 60 FE-B, AD-LU 60 FE-DB is a Modbus slave. Communication takes place according to the master-slave method and starts with a request from the master.
Each slave has a unique address. If a slave detects that its address has been addressed by the master, the slave always sends a response.
The slaves never communicate with each other. They are also not able to start a communication with the Master. The Modbus master can access the documented registers.

INFO

Configuration via the RS-485 interface

When configuring the slave via the RS-485 interface from a PC or laptop, no other Modbus master must be active on the bus.

The slave address of the device can only be changed via the device menu.

INFO

Acception of the slave address

The slave address is accepted immediately. If you still want to access the device via the Configuration program AD-Studio , you must enter the changed device address in the program.

If the baud rate or parity has to be changed to insert the device into an existing bus segment, these parameters can be changed via the Configuration program AD-Studio or via the device menu. See chapter ??

INFO

Übernahme der Baudrate und der Parität

The baud rate and the parity are accepted immediately. The Configuration program AD-Studio can no longer access the device because baud rate and parity can not be changed in this program.

8.2 Data format

All data larger than one byte are sent in the 'Big-Endian' format according to Modbus specification. An exception is the checksum. It is sent in the format 'Little-Endian'.

Examples:

The 16-bit number 0x1234 is transmitted as follows:

Byte1	Byte0
0x12	0x34

The 32-bit number 0x12345678 is transmitted as follows:

Byte3	Byte2	Byte1	Byte0
0x12	0x34	0x56	0x78

8.3 Data types

The following data types are used:

Type	Size	Range
bool	1 Byte	0 ... 1
u16	2 Byte	0 ... $2^{16} - 1$
u32	4 Byte	0 ... $2^{32} - 1$
single	4 Byte	IEEE 754

For the data types u32 and single, two modbus registers are required. They are transferred in the order Byte3, Byte2, Byte1, Byte0.

8.4 Supported functions

The following read and write functions are supported.

0x03 - Read Holding Registers Read one or more registers

0x10 - Write Multiple Registers Write one or more registers

8.4.1 Read Holding Registers

This function is used to read one or more registers of the slave.
Example: Reading the active power P1 of a slave with slave address 1, See the data list in ??.
The master first sends a request with the start address (40801 = 0x9F61) And the number of registers to be read (2 = 0x0002) to the slave.

Slave	Function	Start-address1	Start-address0	Number Register1	Number Register0	CRC0	CRC1
1	0x03	0x9F	0x61	0x00	0x02	0xBB	0xC1

The request is checked. If all data are correct, the slave responds with The number of bytes and the registers requested:

Slave	Function	Number Bytes	Register1	Register0	CRC0	CRC1
1	0x03	4	0x00	0x00	0xFA	0x33

In the event of an error, the slave responds with an error message:

Slave	Errorcode	Exception	CRC0	CRC1
1	0x83	see 8.5		

8.4.2 Write Multiple Registers

This function is used to write one or more registers of the slave.
The master first sends a request with the starting address, the number of registers and the Data to the slave.

Slave	Func.	Start-adr.1	Start-adr.0	Number Reg.1	Number Reg.0	Number Bytes	Value Reg.1	Value Reg.0	CRC0	CRC1
1	0x10									

The request is checked. If all data is correct, the slave responds with the Start address and the number of written registers.

Slave	Func.	Start-adr.1	Start-adr.0	Number Reg.1	Number Reg.0	CRC0	CRC1
1	0x10						

In the event of an error, the slave responds with an error message:

Slave	Errorcode	Exception	CRC0	CRC1
1	0x90	see 8.5		

8.5 Exception Codes

In the event of a faulty inquiry, the slave responds with a Error telegram and one of the following exception codes. The error code is the function code — 0x80.

0x01 - Illegal function The Modbus function is not supported.

0x02 - Illegal Data Adress The register address does not exist. The combination of start address and number of registers leads to invalid register addresses.

0x03 - Illegal Data Value The number of registers requested is invalid.

0x04 - Slave Device Failure The application data itself is invalid.

8.6 Data lists

The following data lists contain all Modbus registers supported by the AD-LU 60 FE-B, AD-LU 60 FE-DB .

8.6.1 Measured values

The measured values return an unfiltered scaled sample of the analog-to-digital converter.

Register	Number	Type	Description	Unit	R/W
40801	2	single	Active Power total	kW	R
40803	2	single	Active Power L1	kW	R
40805	2	single	Active Power L2	kW	R
40807	2	single	Active Power L3	kW	R
40809	2	single	Reactive Power total	kvar	R
40811	2	single	Reactive Power L1	kvar	R
40813	2	single	Reactive Power L2	kvar	R
40815	2	single	Reactive Power L3	kvar	R
40817	2	single	Apparent Power total	kVA	R
40819	2	single	Apparent Power L1	kVA	R
40821	2	single	Apparent Power L2	kVA	R
40823	2	single	Apparent Power L3	kVA	R
40825	2	single	Power Factor total		R
40827	2	single	Power Factor L1		R
40829	2	single	Power Factor L2		R
40831	2	single	Power Factor L3		R
40833	2	single	P(fundamental) total	kw	R
40835	2	single	P(fundamental) L1	kw	R
40837	2	single	P(fundamental) L2	kw	R
40839	2	single	P(fundamental) L3	kw	R
40841	2	single	P(harmonic) total	kw	R
40843	2	single	P(harmonic) L1	kw	R
40845	2	single	P(harmonic) L2	kw	R
40847	2	single	P(harmonic) L3	kw	R
40849	2	single	Voltage L1 to N	V	R
40851	2	single	Voltage L2 to N	V	R
40853	2	single	Voltage L3 to N	V	R
40855	2	single	Current in N	A	R
40857	2	single	Current in L1	A	R
40859	2	single	Current in L2	A	R
40861	2	single	Current in L3	A	R
40863	2	single	Voltage Amplitude L1	V	R
40865	2	single	Voltage Amplitude L2	V	R
40867	2	single	Voltage Amplitude L3	V	R
40869	2	single	Current Amplitude in L1	A	R
40871	2	single	Current Amplitude in L2	A	R
40873	2	single	Current Amplitude in L3	A	R
40875	2	single	Frequency	Hz	R
40877	2	single	Phase Current/Voltage in L1	°	R

Register	Number	Type	Description	Unit	R/W
40879	2	single	Phase Current/Voltage in L2	°	R
40881	2	single	Phase Current/Voltage in L3	°	R
40883	2	single	Phase Voltage L1	°	R
40885	2	single	Phase Voltage L2	°	R
40887	2	single	Phase Voltage L3	°	R

8.6.2 Counter

The counters are stored permanently in the EEPROM.

Register	Number	Type	Description	Unit	R/W
44009	2	u32	Total absorbed active energy	kWh	R/W
44011	2	u32	Total returned active energy	kWh	R/W
44013	2	u32	Total inductive energy	kvarh	R/W
44015	2	u32	Total capacitive energy	kvarh	R/W
44017	2	u32	Total Apparent energy	kVAh	R/W
44019	2	u32	Operating hours	h	R/W
44021	2	u32	Operating hours with load	h	R/W

INFO

Write the counters
In writing a counter is counted further with the new value. This function can be used to reset the counter to 0 or to set it to a known counter reading, for example when replacing the device.

8.6.3 Digital outputs

Here, the states of the two digital outputs can be read out. 0 = Output not activated. 1 = Output activated.

Register	Number	Type	Description	Unit	R/W
40608	1	u16	Digital output 1		R
40609	1	u16	Digital output 2		R

9 Connection diagram

The connection diagram of the AD-LU 60 FE is shown in the figure.

INFO

Voltages

Always connect all 3 phases and the neutral conductor.

INFO

Currents

The direction of the current transformers (K/L) must be observed.

INFO

Digital outputs

The terminals for the digital outputs are only available with the versions AD-LU 60 FE-D, AD-LU 60 FE-DB .

INFO

RS-485

The terminals for the RS-485 interface are only available with the versions AD-LU 60 FE-B, AD-LU 60 FE-DB .

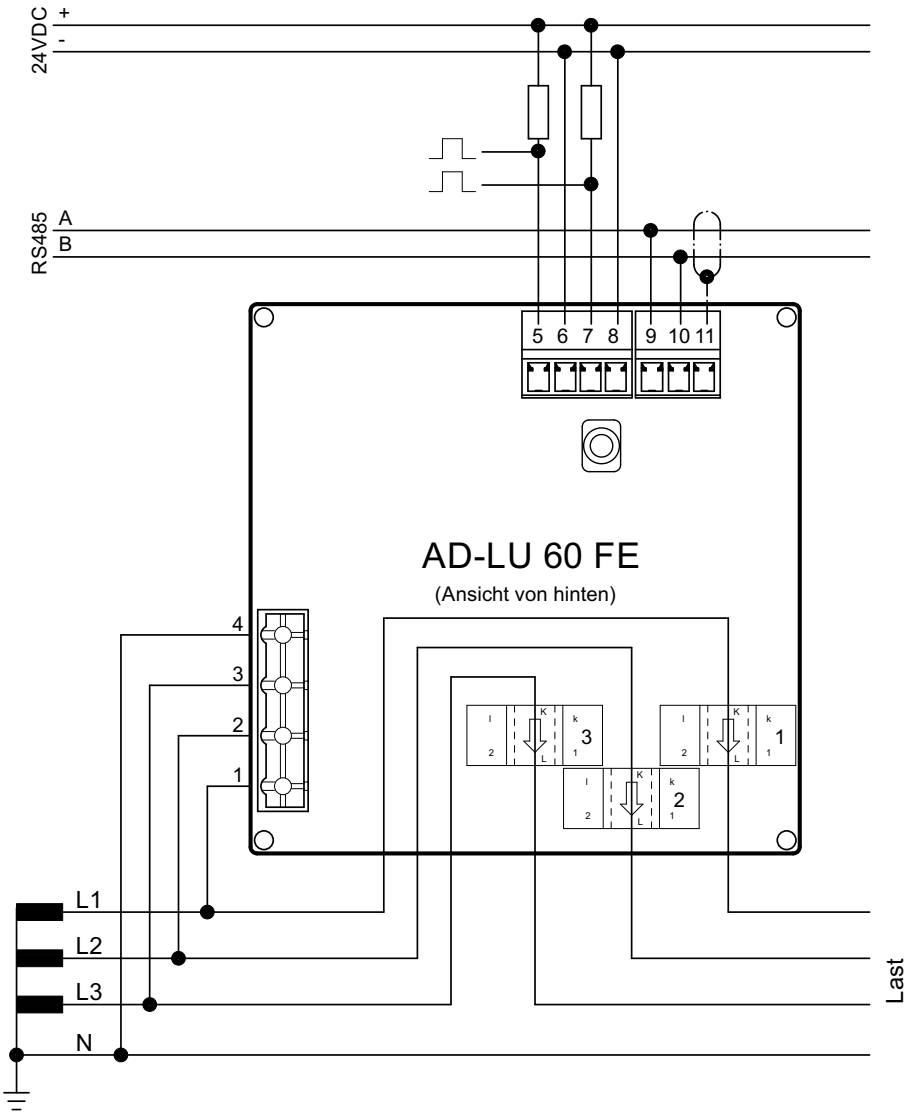

Figure 9.1: connection diagram of the AD-LU 60 FE

10 Appendix

10.1 Maintenance and Service

During the proper operation of the AD-LU 60 FE this is Maintenance free. The device may only be repaired by the manufacturer in the event of damage become.

10.2 Disturbances

If an error or fault occurs, first try to find the cause using the following table. If the error persists, please contact the manufacturer or dealer of the device.

Error	Reason	Activity
Power values are negative	The current carrying line is routed wrongly through the current transformer. k/l must be observed.	Check the cable routing through the current transformer.
Measured values for current, voltage or power are too large or too small.	Transmission ratio of the current or voltage transformer incorrectly configured.	Check the data of the current and voltage transformers.
No connection to the device via the serial interface	Wrong slave address Wrong bit protocol A and B interchanged	Check the configuration of the interface, the slave address and the correct connection of the data lines A and B.

10.3 Revisions

Revision	Date	Remarks
1.0	2016-05-10	Document created
1.1	2017-01-17	Maximum data for current and voltage transformers changed.

10.4 Addresses

If you have further questions about the product, requests or suggestions, please contact us at the address below.

Adamczewski elektronische Messtechnik GmbH

Phone: 07046/875
Fax: 07046/7678

Subject to technical changes and printing errors.