ADAMCZEWSKI
Elektronische Messtechnik GmbH
Phone +49 7046 875
Fax +49 7046 7678

- GERMANY -

Operating Instructions

Version: 1.0.8

Multi-function Measuring Transformer VarioCheck

AD-VC 3



AD-VC 3B



SALES & ADVICE
GRUBATEC
MESS- UND REGELTECHNIK

MANUFACTURER
ADAMCZEWSKI
Elektronische Messtechnik

Grubatec AG · Wölferstrasse 5 · CH-4414 Füllinsdorf
+41 55 617 00 80 · info@grubatec.ch · www.grubatec.ch

Subject to technical changes and printing errors.

Contents

About this manual....4
Function and applications....4
Features....4
Type key....5
Technical data....5
Current input....5
Voltage input 10V....5
Voltage input 1V....5
Potentiometer input....5
Transmitter supply....6
Current output 20mA....6
Voltage output 10V....6
Relay outputs A..D....6
Transient response....6
Supply....6
Housing....7
Environmental conditions....7
EMC....7
Galvanic separation, test voltages....7
LCD display....7
Functional block diagram....8
Operating the device....8
Display and operating elements....8
Operation....9
The operating modes....9
Operating mode normal operation....9
The status line....11
Operating mode menu....11
Operating mode edit....11
Operating mode error indication....11
Operating mode simulation....12
Configuration....13
The menu tree....13
Device parameter....14
Input....14
Trend....14
Learning....14
Scaling....15
Characteristic....15
Characteristics points....16
Output....16
Limiting value n....16
Simulation....16
Display....17
Parameter....17
Device functions....18
Filtering the input signal....18
Scaling and characteristic line....18
Linear scaling....19
Non-linear scaling via the user characteristic line....20
Non-linear scaling via a fixed characteristic line....21
Limiting value function....22
Hysteresis function....22
Window function....22
Trend function....23
Simulation....24

SALES & ADVICE
GRUBATEC
MESS- UND REGELTECHNIK

MANUFACTURER
ADAMCZEWSKI
Elektronische Messtechnik

Grubatec AG · Wölferstrasse 5 · CH-4414 Füllinsdorf
+41 55 617 00 80 · info@grubatec.ch · www.grubatec.ch

Subject to technical changes and printing errors.

Setting the simulations parameter 24
Starting Simulation 24
Specifying the simulation values manually. 24
Shutting the simulation values down automatically as ramp.....24
Stopping the simulation.....24
Connection pictures.....25
Terminal location.....26
Terminal allocation.....27
Dimensional drawing.....28
Revisions.....28

About this manual

In this manual, features and specifications of all variants are listed. Please note that some technical data or descriptions such as relays or LCD data may not be applicable to your device model. The characteristics of each device variant can be found in the type key.

Function and applications

The digital multi-function measuring transformer of series VarioCheck VC 3 are freely programmable digital measuring transformer with two analogue outputs and up to 4 limiting value relays. Alternatively, a bipolar voltage of up to 10 V, a bipolar current of up to 20 mA or a potentiometer in three-wire method is possible as input signal. Additionally, a a supply for 2 or 3 wire transmitter is integral. The inputs are galvanic separated from the auxiliary voltage and from the outputs. The two analogue outputs can be utilised simultaneously.
Extensive standard equipment and additional options solve almost all imaginable tasks of a modern evaluation. The input of all characteristics is carried out directly at the device or, alternatively, via the configuration software AD-Studio. An edit lock protects the device against undesired parameter alteration. VarioCheck fulfils all tasks of a universal and secure measuring value recording through integral function modules such as limiting value messages, freely adjustable hysteresis, window comparer, selectable relay functions, time-delayed switching, automatic or manual simulation modus, free linearising curves and a wide range of supply voltage.

Features

- Bipolar voltage inputs
- Bipolar current input
- Supply of 2-/3-wire transmitter
- Potentiometer input
- Current and voltage output, differently scalable and can be utilised simultaneously
- Galvanic 3-circuit separation of input, output and supply.
- Error message with missing or defective sensor at measuring range 4-20 mA
- LCD for display of different operating modes, lit in several colours (R/Y/B).
- Freely definable scaling of the quantity to be measured through stating range, decimal point position and unit from the list or defined unit.
- Zoom function, expanded scale, linearising, inverse modus
- Automatic or manual simulation operation
- Monitoring of the measuring signal with up to 4 freely adjustable limiting values (only variants /R2 and /R4)
- Slave pointer function (saving min. and max. value)
- Locking the parametrising via edit lock
- Non-volatile saving of all set parameter
- Pluggable and codeable terminal strips

Type key

	AD-VC 3 GVF-R0	AD-VC 3 GVF-R2	AD-VC 3 GVF-R4	AD-VC 3 GF-R0	AD-VC 3 GF-R2	AD-VC 3 GF-R4	AD-VC 3B GVC-R0	AD-VC 3B GVF-R2	AD-VC 3B GVF-R0
Current- and voltage inputs, Potentiometer input, Transmitter-supply, Current- and voltage output	yes	yes	yes	yes	yes	yes	yes	yes	yes
Relays	0	2	4	0	2	4	0	2	4
LCD display	yes	yes	yes	yes	yes	yes	no	no	no

Technical data

Current input

Measuring range	-20,4 .. +20,4	mA
Resolution	13	Bit
Accuracy	Approx. 5	uA
Input resistance	60	Ohm

Voltage input 10V

Measuring range	-10,2 .. +10,2	V
Resolution	13	Bit
Accuracy	Approx. 2.5	mV
Input resistance	1	MOhm

Voltage input 1V

Measuring range	-1,02 .. +1,02	V
Resolution	13	Bit
Accuracy	Approx. 250	uV
Input resistance	>1	MOhm

Potentiometer input

Connection method	3-wire	
Measuring principle	Ratio, loop to supply voltage.	

SALES & ADVICE
GRUBATEC MESS- UND REGELTECHNIK
MANUFACTURER
ADAMCZEWSKI Elektronische Messtechnik
Grubatec AG · Wölferstrasse 5 · CH-4414 Füllinsdorf
+41 55 617 00 80 · info@grubatec.ch · www.grubatec.ch

Subject to technical changes and printing errors.

Admissible total resistance	0.1 .. 100	kOhm

Transmitter supply

Supply voltage, no-load running	24,5	V
Supply voltage, 20mA	19,5	V
Current limiting	Approx. 25	mA

Current output 20mA

Output range	0 .. 20,4	mA
Resolution	10	Bit
Accuracy	Approx. 20	uA
Maximum burden	500	Ohm
Residual ripple	20	uAss

Note: If the voltage output is used simultaneously, the two circuits must not be connected externally with each other.

Voltage output 10V

Output range	0 .. 10,2	V
Resolution	10	Bit
Accuracy	Approx. 10	mV
Minimum burden	5	kOhm
Residual ripple	10	mVss

Note: If the current output is used simultaneously, the two circuits must not be connected externally with each other.

Relay outputs A..D

Version	Up to 4 change-over contacts	
Max. switching voltage AC Max. switching current AC	250 2	V AC A AC
Max. switching voltage DC Max. switching current AC	50 2	V DC A DC

Transient response

Rise time output to 90% with input of 0 to 20mA.	100	ms, digital filter off
Linearity error	<0,2	% of end value
Temperature influence	+/-100	ppm/K of end value

Supply

Supply voltage	50..253 20..350	V AC V DC
Max. power consumption at 24V DC	2,6	W
Max. power consumption at	5	VA

230V AC		

Housing

Dimensions WxHxD	33x110x128	mm
Material		
Build-up	DIN rail 35mm, EN 50022	
Type of protection	IP20	
Connection method	Screw clamps, can be pulled off, 5mm grid	
Clamp cross-section	Max. 2.5	mm²
Weight	Approx. 200	g

Environmental conditions

Admissible ambient temperature	-10..60	°C
Storage and transport	-10..70	°C

EMC

Product family standard	EN 61326
Discharge static electricity, ESD	IEC 61000-4-2
Electromagnetic fields 1)	IEC 61000-4-3
Quick transients, burst	IEC 61000-4-4
Impulse voltages, surge	IEC 61000-4-5
Route controlled high-frequency signals	IEC 61000-4-6
Error transmission	EN55011, CISPR11 class B, living area

1) During checking, slight signal deviations are possible.

Galvanic separation, test voltages

Input to output	2,5	kV, 1min
Input/outputs to auxiliary voltage	4	kV, 1min
Outputs among each other	none	
Input to programming interface	none	

LCD display

Resolution	42x64 pixel
Background lighting	Three-colour red, green, blue

Functional block diagram

The block diagram applies to all versions with relay in the GF / GVF case.

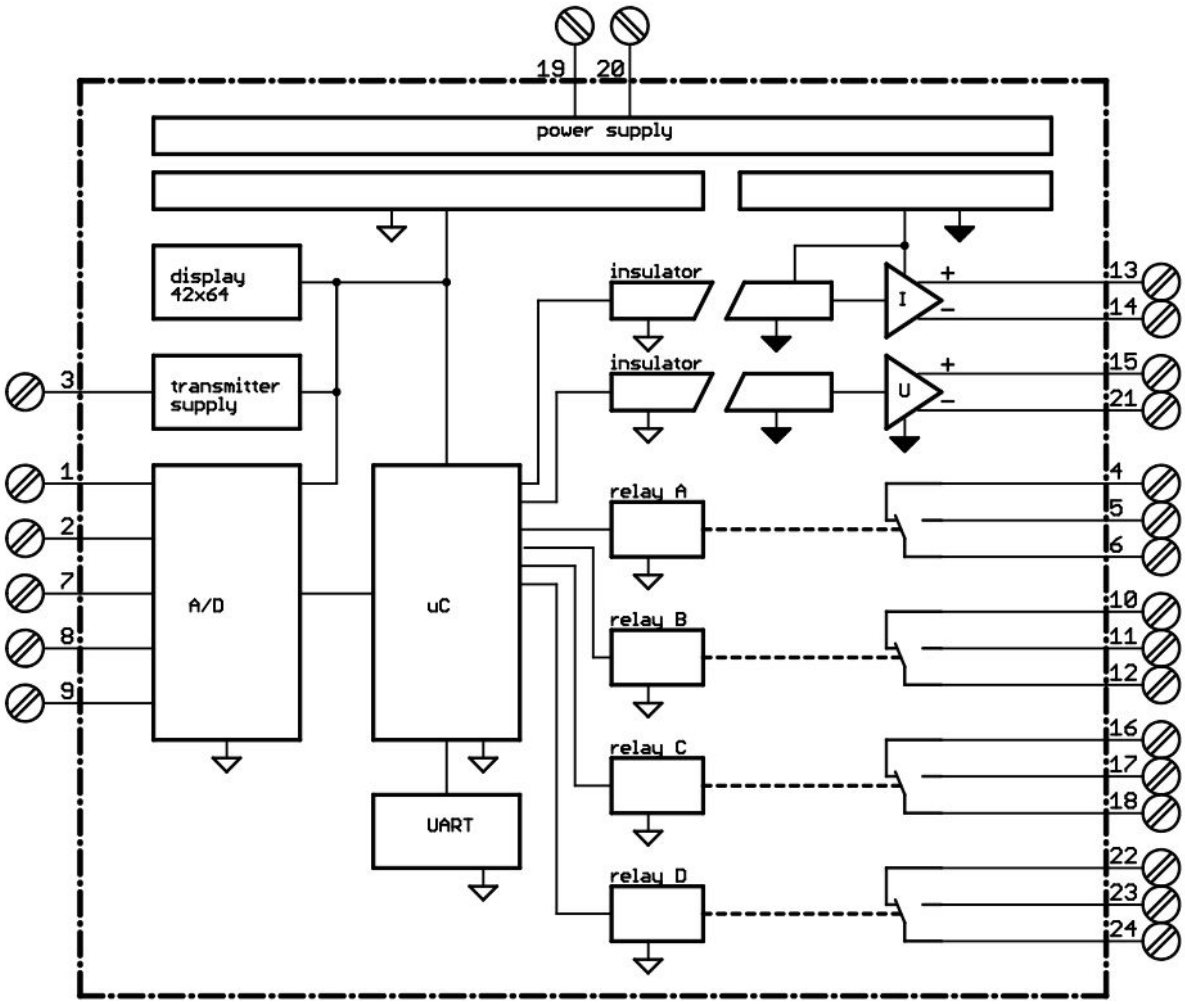

Operating the device

Display and operating elements

The device has at the front a graphic display with coloured background lighting and the communication interface for configuration through a PC, for operating three short stroke keys, for displaying the measuring value and the parameter.

Operation

The device is operated with the three keys, „up", „down" and „set". There are no combinations of keys, which have to be pressed simultaneously. The keys are pressed one at the time. The key function depends on the current operating mode. It is differentiated between a short and a long key pressure. A long key pressure is recognised after approx. 2s. Therefore, in the following, pressing the key means pressing the key briefly, key pressure > 2 seconds means a long pressure.

Key	Function
„up"	In normal operation, pressing this key returns you to the previous display. In parametrising you navigate with this to the previous menu element. When editing a parameter, the previous list element, or when incrementing a digit, the selection is made with this key. The current display is scrolled or the current parameter is incremented with a long key pressure.
„down"	In normal operation, pressing this key takes you to the next display. In parametrising you navigate to the next menu element. When editing a parameter, the next list element, or decrementing a digit, the selection is carried out with this key. The current display is scrolled or the current parameter is incremented with a long key pressure.
„set"	In normal operation, pressing the key switches on the lighting. A long key pressure changes to parametrising. In parametrising, the selected element is selected with pressing the key. A long key pressure returns you to the normal operation. During editing, pressing the key confirms the selected list element or the edited digit. A long key pressure returns you to parametrising.

The operating modes

The device is always in one of these operating modes, which are explained in more detail in the following.

- Normal operation
- Menu
- Edit
- Error indicator
- Simulation

Operating mode normal operation

After switch on, the device is in normal operation and carries out all functions set in its parameter. The indicator lighting is blue and goes off after approx. 2 minutes in standard setting, if no other key has been pressed. The first line contains the heading, the last line contains status information about relays and input signal. With a long key depression, the device changes to operating mode parametrising. With the keys „up" and „down" you can switch between the following display views.

Display view	Display image	Comment
Scaled input signal	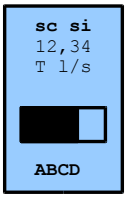	Shows the scaled input signal with user-defined decimal point position, unit and trend indication T. For an explanation of this last item see trend function.
Input signal	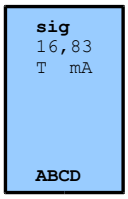	Display of the selected input signal with unit and trend indication. For an explanation of this last item see trend function.
Outputs	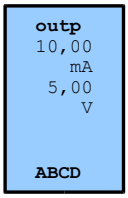	Display of both analogue output signals with unit. The calculated nominal values are shown. The device cannot recognised a short circuit or an interruption in the current loop, therefore it cannot show them.
Limiting values A/B limiting values C/D	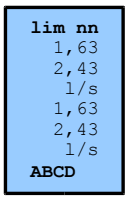	Shows the limiting values for relays A and B (only with types /R2 and /R4).
Slave pointer	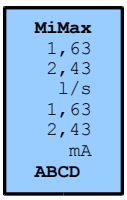	Shows the min/max values of the scaled input signal. The values can be reset with a long depression of „up" or „down".
Info	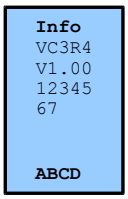	Shows the following device information: ● Type of device ● Version of firmware ● Production number

The status line

The last line in the display contains status information for the relays and the signal condition. The max. four relays are marked with the capital letters 'A'..'D'.

Mark	Meaning
1-4	• 'N' Relay N is activated (also Relays 'A', 'B', 'C' or 'D') • 'n' Relay N has been activated (indication only when the parameter „save" has been set to „yes" for this relay). Through pressing the key „set", the flag can be deleted again. • '-' Relays N is not activated. • ' ' Space. No relay exists for this type of device.
5	• In normal operation, the status of the measuring signal is shown here. Arrow up/down '▲', '▼' shows that the measuring signal has exceeded/fallen below the set input measuring range. This indicator is empty in the valid range. • 'S' is shown in simulation modus. Exceeding of the measuring range is not possible here.

Operating mode menu

A long depression of the key „set" takes you from normal operating mode to operating mode menu. The indicator lighting is yellow. In the menu tree you can navigate up and down with the keys „up" and „down". With pressing the key „set" the elements are selected. This can be a parameter, a further sub-menu or also a device function, such as contrast setting. Each menu offers as last entry the possibility to return to the previous menu. The last entry is marked with an arrow to the left „<" (see also section „The menu tree"). A long depression of the key „set" returns you to normal operating mode. If no entry is made for approx. three minutes, you are also branched to the normal operating mode.

Operating mode edit

Selecting a parameter with a short depression of the key „set" takes you from the menu to the edit modus. The indicator lighting is white. Altered parameter become effective immediately. If no entry is made for approx. three minutes, you are branched to the menu again.

Parameter	Indicator image	Comment
Numeric parameter	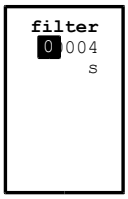	The current digit, which can be edited, is shown inverse and can be incremented or decremented with the keys „up" and „down". When the last edited digit is confirmed with „set" and the digit has passed the data check, the parameter is taken over. A long depression on the key „set" cancels the entry and returns to the menu.
Lists	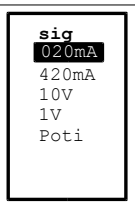	The current list element is shown inverse and can be altered with the keys „up" and „down". If the current list element is confirmed with the key „set", the selected entry is taken over. A long depression on the key „set" cancels the entry and returns to the menu.

Operating mode error indication

After an error has occurred, you get to the error indication. The indicator lighting is

red.

Type of error	Indicator image	Comment
Input error	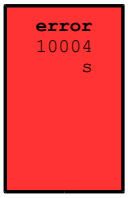	The faulty value is shown and must be confirmed through pressing the key „set".
Signal error	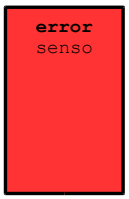	With the input signal type „420mA", the „Live Zero Signal", that is the 4mA, is checked and a line break is shown. The word „Probe" appears in the indicator. The indication appears when the signal has fallen below 2mA and it disappears when 3mA has been exceeded again. The key „set" suppresses the error for approx. 3 minutes. If the error then still exists, the indication appears again.

Operating mode simulation

With setting the relevant parameter in the menu you get to the operating mode simulation. The indicator lighting is orange.

Type of simulation	Indicator image	Comment
Temporary, automatic	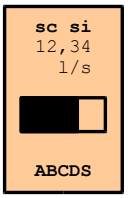	To switch on the simulation, go to the simulation menu and set the parameter for the simulation mode to „temporary" or „constant". The simulation is ended through setting the simulation mode to „off" again, or when in simulation mode „temporary" the simulation time of approx. three minutes has expired.

Configuration

The menu tree

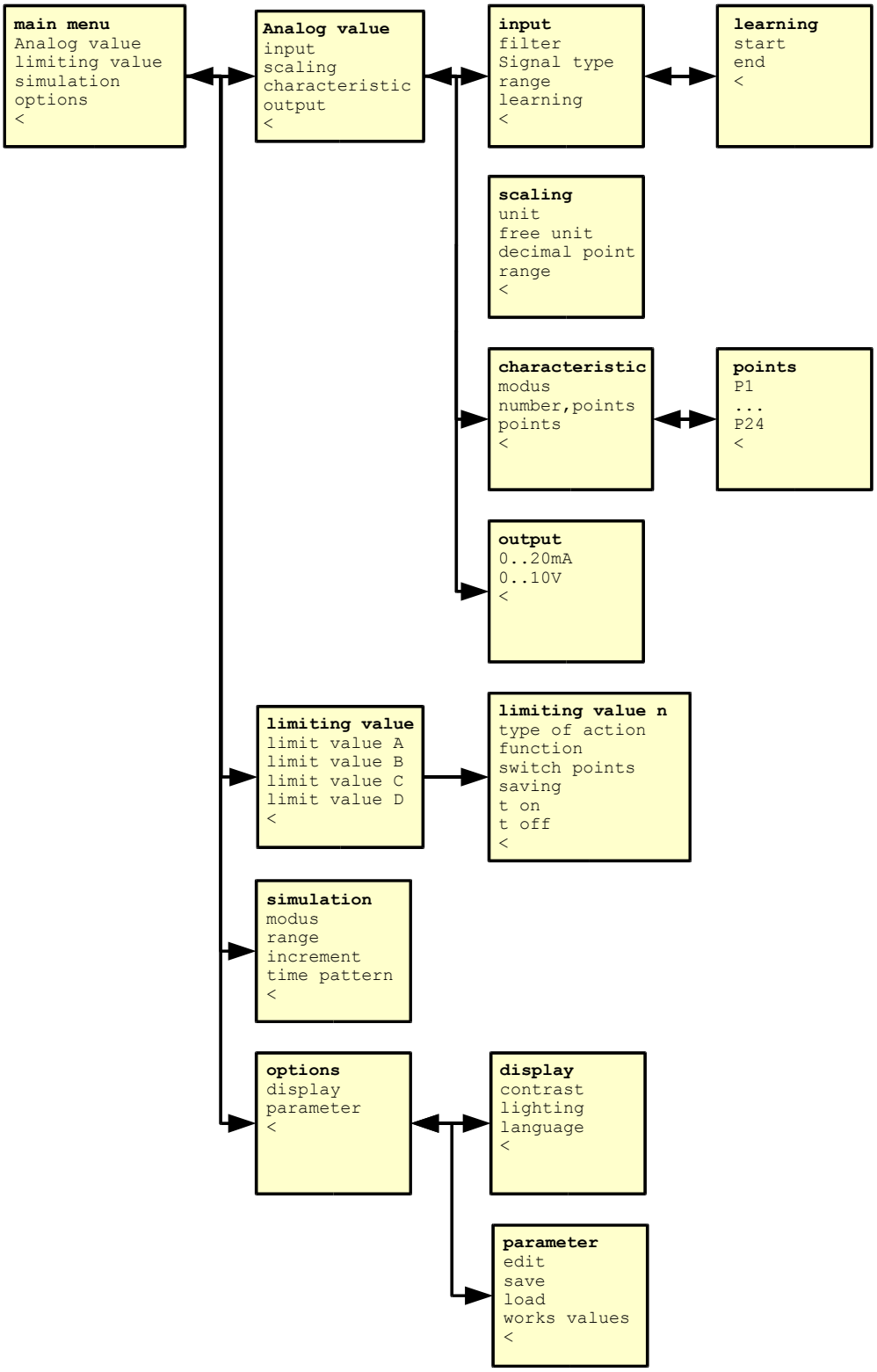

Device parameter

The following describes the device parameter and device functions, which can be altered or executed in the menu.
Note: altered device parameter become effective immediately, even if you are still in the menu.

Input

Name	Factory setting	Range	Unit	Comment
Filter	10	0..9999	s	Input filter. 0 switches the filtering off.
Type of signal	„020mA“	„020mA“ „420mA“ „10V“ „1V“ „Poti“		Selection of the required input signal.
Range	0..20 4..20 0..10 0..1 0..100	-20,4..+20,4 -20,4..+20,4 -10,2..+10,2 -1,02..+1,02 0..100	mA mA V V %	Range and unit depend on the selected type of signal.

Trend

Name	Factory setting	Range	Unit	Comment
Trend time	60	1..9999	s	Time slot pattern in which the trend is ascertained cyclical.
Trend rising	10	1..9999	%	Value signal difference in scaled unit for recognition of a rising trend.
Trend falling	10	1..9999	%	Value signal difference in scaled unit for recognition of a falling trend.

Learning

Name	Factory setting	Range	Unit	Comment
Start				The current measuring value is shown. Pressing „set“ takes over the measuring value as measuring range start.
End				The current measuring value is shown. Pressing „set“ takes over the measuring value as measuring range end.

SALES & ADVICE
GRUBATEC MESS- UND REGELTECHNIK
MANUFACTURER
ADAMCZEWSKI Elektronische Messtechnik
Grubatec AG · Wölferstrasse 5 · CH-4414 Füllinsdorf
+41 55 617 00 80 · info@grubatec.ch · www.grubatec.ch

Subject to technical changes and printing errors.

Scaling

Name	Factory setting	Range	Unit	Comment
Unit	„%“	„l“, „m3“, „%, „mWs“, „mm“, „cm“, „m“, „mbar“, „bar“, „psi“, „WC“, „Mpa“, „°C“, „mV“, „V“, „mA“, „l/s“, „l/min“, „m3/h“, „kg“, „t“, „s“, „m/s“, „km/h“ „?“		Unit of the scaled quantity. When selecting the last unit in the list „?“, the free unit is used instead.
Free unit	„ ?“			Free unit, five characters ASCII-characters 32 to 126, that is space ' ' to tilde '~'. To use the free unit, under „Unit“ select the last unit in the list („?“). Pad out with leading spaces to achive a right aligned string.
Decimal point	"XXX,X",	"XXXX", "XXX,X", "XX,XX", "X,XXX",		Decimal point position for indicating the scaled value.
Range	0,0..100,0	-999..9999	„Unit“ or „Free unit“	Scaling range , on which the input signal is scaled linear.

Characteristic

Name	Factory setting	Range	Unit	Comment
Modus	"Off"	"off" "table" "cylin" "ball"		Determines the type of characteristic editing. For the user-defined table, the entry „Table“ must be selected and the number of points must be determined under „Number of points“.
Number of points	24	3..24		Number of supporting points for the user-defined table.

Characteristics points

Name	Factory setting	Range	Unit	Comment
P1 ... P24	0/0 ... 20/100		mA/%	X- and y-values or the characteristic line. The x-values correspond to the input signal, the y-values to the scaled quantity. The decimal point and the unit depend on the selection of input signal and the scaling parameter.

Output

Name	Factory setting	Range	Unit	Comment
Output 0..20mA	0..20	0..20,4	mA	Current output range
Output 0..10V	0..10	0..10,2	V	Voltage output range

Limiting value n

Name	Factory setting	Range	Unit	Comment
Type of action n 1)	„Work“	„act“ „pass“		Action relay n. Full-load current or closed-circuit current.
Function n 1)	„Hyst“	„off“ „hyst“ „windo“		Action relay n. No relay editing, hysteresis or window comparer.
Switch points n 1)	A: 10.0/20.0 B: 30.0/40.0 C: 50.0/60.0 D: 70.0/80.0		% % % %	Switch points relays A..D in scaled units.
Saving n 1)	„No“	„no“ „yes“		Save responded relays in the display as lower case letter.
Response time n 1)	0	0..9999	s	Time delay before the relay responds.
Release time n 1)	0	0..9999	s	Time delay before the relay releases.

1) n = 1..2 with device variant /R2 and 1..4 with device variant /R4.

Simulation

Name	Factory setting	Range	Unit	Comment
Modus	„Off“	„Off“ „Temp“ „Const“		Determines the operating mode of the simulation. Simulation off, temporary (switches itself off after approx. 3 minutes) or constant
Range	0..100,0		%	Simulation range in

				scaled units.
Increment	1	1..9999	%	Simulation increment in scaled units.
Time slot pattern	1	1..9999	s	Simulation time slot pattern

Display

Name	Factory setting	Range	Unit	Comment
Contrast	50	0..100		Display contrast is altered during setting and is permanently saved through confirming with „set". A long depression of the key „set" cancels the value.
Lighting	„Auto"	„Off" „On" „Auto"		Display lighting permanently off, permanently on or automatic off approx. Three minutes after the last key has been pressed.
Language	„ge"	„ge" „en" „fr"		Indicator language German, English or French+.

Parameter

Edit	„Yes"	„No" „Yes"		Edit parameter release or barring.
Save		„No" „Yes"		Save current device parameter in the EEPROM.
Load		„No" „Yes"		Load device parameter from the EEPROM.
Factory setting		„No" „Yes"		Execute function „factory setting". The current device parameter are overwritten with the works values. A reset is carried out afterwards.

SALES & ADVICE
GRUBATEC
MESS- UND REGELTECHNIK
MANUFACTURER
ADAMCZEWSKI
Elektronische Messtechnik
Grubatec AG · Wölferstrasse 5 · CH-4414 Füllinsdorf
+41 55 617 00 80 · info@grubatec.ch · www.grubatec.ch

Subject to technical changes and printing errors.

Device functions

Filtering the input signal

The input signal is transformed to a digital value via an analogue digital transducer and is filtered digital prior to any further processing. The raw value of the A/D-transducer is filtered during each programme through-run with the following function:

$$X_t = \frac{X_t + X_{t-1} * (F-1)}{F}$$

whereby X is the A/D-transducer value, t is the time of the current measuring, t-1 is the time of the last measuring and F is the filter value. For the VC 3, the following approximate step response times result (0..90%)

F	t/ms
0	100
10	200
20	300
30	400
40	500
50	600
100	1.2s
250	3s
500	6s
1000	12s
2000	24s
...	
9999	approx. 120s

Scaling and characteristic line

The analogue input can be scaled on a user-defined capacity for indication and for entering defined parameter. The switch points of the limiting values, the simulation range, the simulation increment and the Y-values of the user characteristic line are shown scaled and entered. With linear scaling, the scaling range form the scaling parameter is used. With non-linear scaling, either the user-defined characteristic line or one of the fixed characteristic lines is used. The following parameter must be observed (Yes) or they are not important with this (No).

Parameter	**Linear, no characteristic line**	**Not linear, user characteristic line**	**Not linear, fixed characteristic line**
Characteristic line modus	„Off“	„Table“	„Cylin“ or „Ball“
Number of characte-ristic line points	No	Yes	No
Characteristic line points	No	Yes	No
Scaling range	Yes	No	Yes
Scaling decimal point, scaling unit	Yes	Yes	Yes
Input measuring range	Yes	No	yes

Linear scaling

The following example shows the connection between analogue input, scaled quantity and the analogue output with linear scaling.
Application: filling level measuring in a 5000 litre tank with an immersion probe 4..20mA. At the measuring range start of 4mA, there is a remaining quantity of 100 litres in the tank. With 5000 litres, the probe current is 18mA. The output is to be l 4..20mA.
Settings: input current input 0..20mA or 4..20mA; measuring range 4..18mA; scaling range 100..5000; scaling unit „l"; scaling decimal point „xxxx" (no decimal point)
Measuring: first, convert the measuring signal of 7.4mA to the scaled quantity. This results in a value of 1290l. This value is now converted onto the output, whereby this results in an output current of 7.9mA.
Note: If the measuring signal falls below or exceeds the set measuring range of 4..18mA, the scaled value, and therefore also the output, is connected to the starting value or end value.

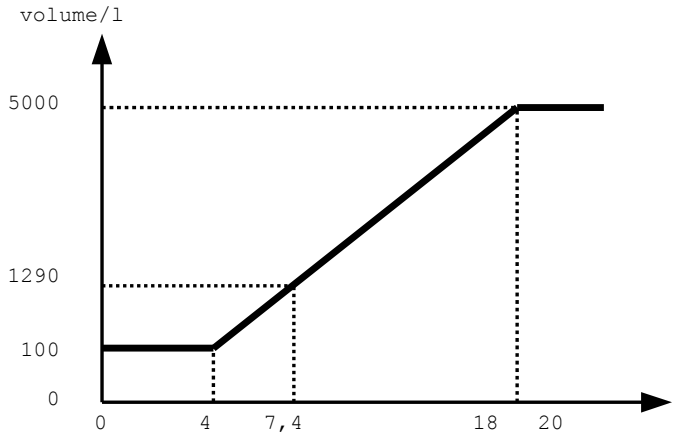

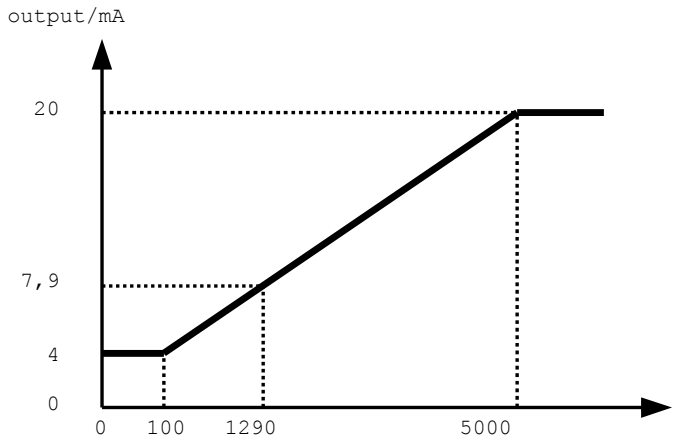

Non-linear scaling via the user characteristic line

The following example shows the connection between analogue input, scaled quantity and the analogue output with non-linear scaling via the user characteristic line.
Application: filling level measuring in a 4500 litre tank with an immersion probe 4..20mA. At measuring range start of 4mA, a remaining quantity of 150 litres is in the tank. At 4500 litres, the probe current is 17mA. The output is to be 4..20mA. The characteristic line has been ascertained through the following value pairs.

Input/mA	Volume/l
4	150
10	1350
13	3850
17	4500

Settings: Input current input 0..20mA or 4..20mA; the setting of the measuring range and the scaling range is not applicable, as values from the characteristic line are interpolated; scaling unit „l"; scaling decimal point „xxxx" (no decimal point); number of characteristic line points 4; points according to table.
Measuring: First, the measuring signal of 7.4mA is interpolated from the characteristic line. This results in a scaled value of 830l. This value is now converted linear to the output, whereby this results in an output current of 6.5mA.
Note: if the measuring signal falls below or exceeds the first or the last value from the table, the scaled value, and therefore also the output, is connected to the starting value or end value.

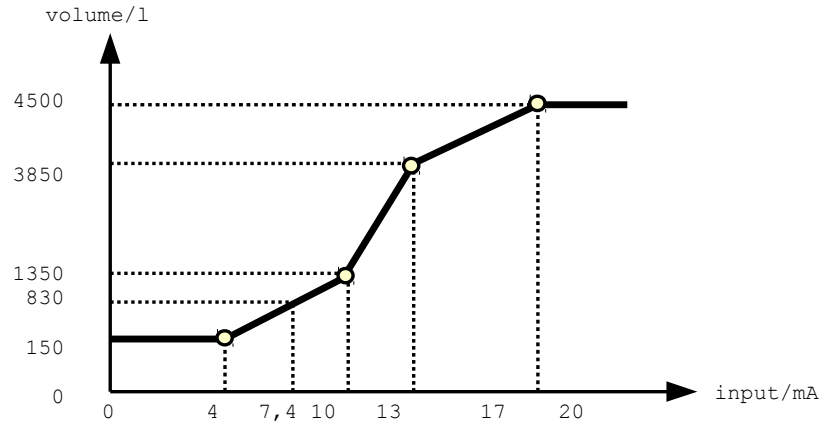

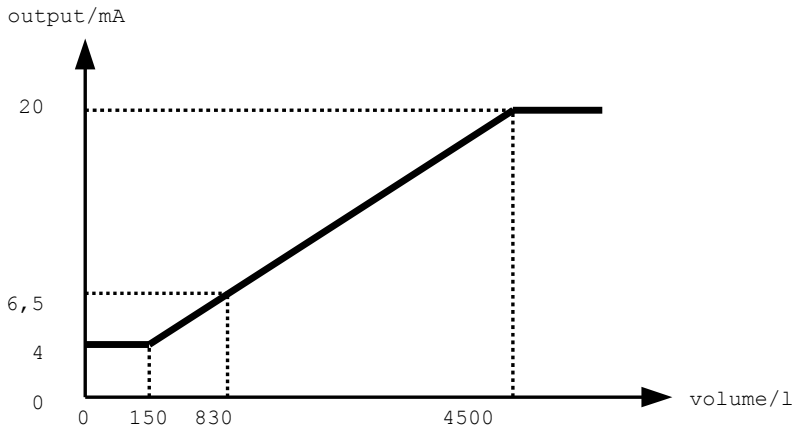

Non-linear scaling via a fixed characteristic line

Apart from the user-defined characteristic line, fixed characteristic lines can be used for predetermined applications. The characteristic of this characteristic line, in contrast to the user-defined characteristic line, is connected in the selected input measuring range. The following fixed characteristic lines can be set via the parameter characteristic line modus.

Characteristic line modus	Function
„Cylin"	Filling level calculation via the filling level h of a horizontal cylindrical round tank with radius r. The filling level is specified typically through a pressure transmitter. The characteristic of the characteristic line is determined through the surface of the circular segment and connected between the measuring range start and the measuring range end. The length of the tank l results indirectly from the tank volume, which is specified as scaling end. $V = (r^2 \arccos(1 - \frac{h}{r}) - \sqrt{2rh - h^2} * (r - h)) * l$
„Ball"	Filling level calculation via the filling level h of a ball-shaped tank. The filling level is typically specified through a pressure transmitter. The volume of the tank is specified through the scaling data. $V = \frac{h * 2\pi}{3} * (3r - h)$

Limiting value function

The limiting value function can be set for each single relay. The terms „active" and „passive" or „not active" refer to the logic of the limiting value function. Whether the relay responds or releases during activated function depends on the setting of the type of action for this relay. Here, full-load current means responded with activated function and not responded with not activated function. With closed-circuit current the reverse is true.

Hysteresis function

The hysteresis function becomes active when the measuring value has exceeded the upper switch point and the switch-on delay tvon has expired. It becomes passive again when the measuring value falls below the lower switch point and the switch-off delay has expired.

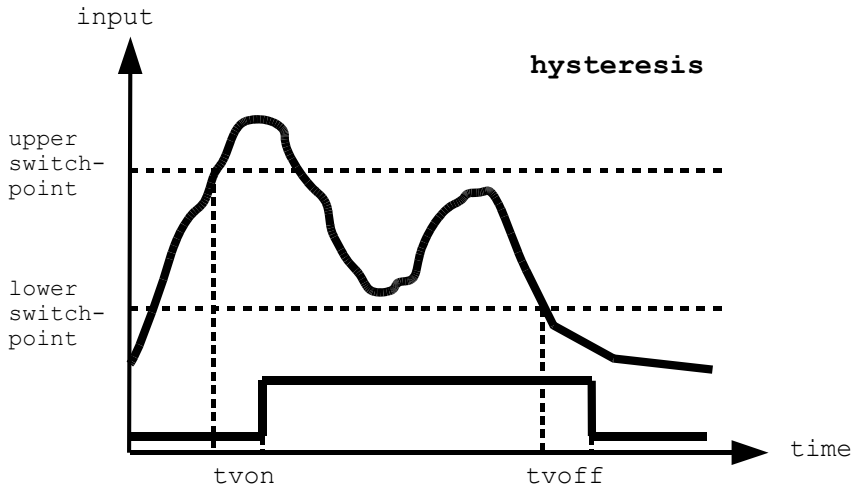

Window function

The window function becomes active when the measuring value lies between the upper and the lower switch point and the switch-on delay time tvon is expired. It becomes passive again when the resuming value falls below the lower switch-point or the upper switch point is exceeded and the switch-off delay is expired.

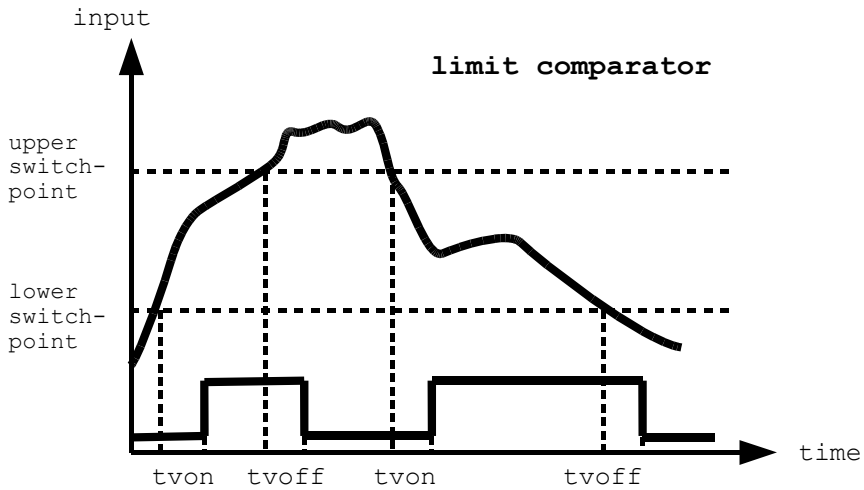

Trend function

The trend function shows the trend of the input signal over time. For this, the present measuring value is frozen at certain intervals, the trend time, and at the end of the trend time, the frozen value is compared to the current measuring value, plus or minus a parametrisable trend difference. This comparison results in a rising, falling or invariable trend.

$$rising\ trend = data_t > (data_{(t-trend\ time)} + trend_{rising})$$
$$falling\ trend = data_t < (data_{(t-trend\ time)} - trend_{falling})$$

otherwise

$$constant\ trend$$

In normal mode, the trend can be read off in the display for the input signal and the scaled input signal in the unit line left, underneath the numerical value of the signal. The arrow up „▲" means rising signal trend, the arrow down „▼" means a falling signal trend and the equal sign „=" means an invariable signal trend. For parametrising the trend function, three parameter are available, „Trend time", „Trend rising" and „Trend falling". The trend information rising, falling or invariable signal can also be displayed through the relay outputs. For this, the relay function of the corresponding entry must be selected from the list. Each relay can take on a different relay function, for instance, relay A can show the rising trend, relay B can show the invariable trend. The function invariable trend in connection with a long trend time can be utilised for monitoring a sensor, to monitor signal standstills, i.e. with stuck mechanical transmitters. In the illustration, relay A is configured for display of rising trends and relay B is configured for display of an invariable trend. Note*: The trend information is only determined at the end of the trend time. With long trend times, this can possibly lead to confusion, if the trend of the monitored signal reverses several times during the trend time, when the trend of the last interval is still displayed.*

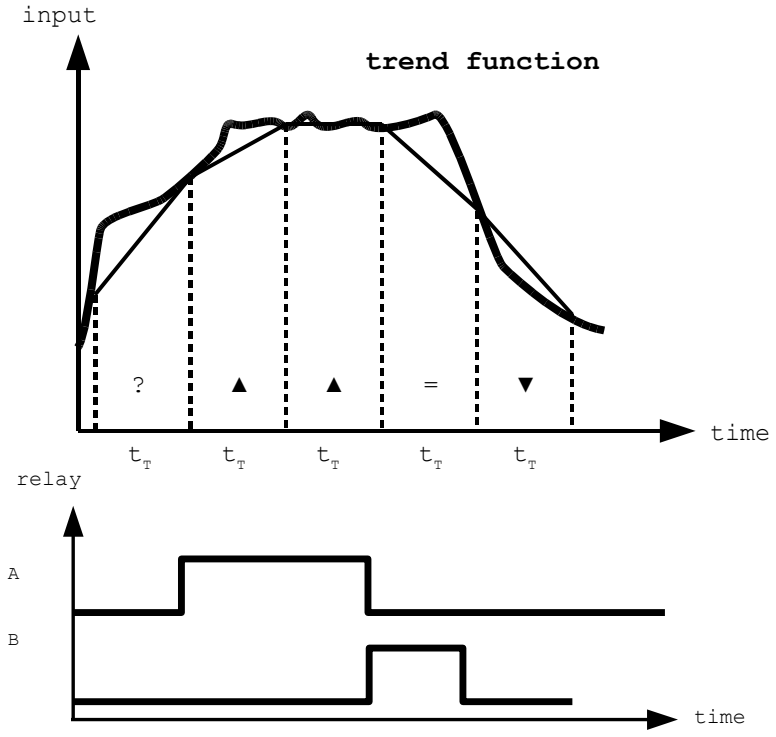

Simulation

In simulation mode, the VC 3 offers the possibility to specify the scaled value manually. This possibility is an important aid, for instance, during commissioning, when there are still no, or not the required, measuring values available from the process.
Note: All other device functions such as limiting value, editing and analogue output remain functioning without limitation, as if the scaled value had been derived from the measuring value. This characteristic can be utilised very well, for instance, for the nominal value specification at the analogue output.

Setting the simulations parameter

To set the simulation parameter, the parameter from the simulation menu must be checked or altered. Set the simulation modus to „Temp", when the simulation mode is to be cancelled automatically after approx. 3 minutes and the device returns to normal mode. Set the simulation modus to „Const" when the simulation mode should remain permanently switched on.
The limits for the simulation value are set with the simulation range. The increment determines the increment, around which the manual or automatic incrementing/decrementing is carried out. The time slot pattern specifies in seconds the interval during automatic incrementing/decrementing.
Note: The simulation modus is saved non-volatile. After switching the device off and then on again, it is still in simulation modus!

Starting Simulation

After the simulation modus has been set to „Temp" or „Const", long depression of the „set" in the menu. Instead of changing to the normal mode, the device now goes into simulation mode and displays the scaled value.
Note: the last value from the normal mode is taken over as starting value in simulation mode.

Specifying the simulation values manually.

Starting with the start value, the simulation value is increment or decrement by the increment through pressing the key „up" or "down".

Shutting the simulation values down automatically as ramp

With a long pressure on the key „up" or "down", the simulation value in the specified time slot pattern is automatically incremented or decremented. If the simulation value has reached the end or the beginning of the simulation range, the direction reverses automatically. The automatic mode can be ended again with pressing the key „up" or „down".

Stopping the simulation

The simulation can be stopped through setting the simulation modus in the simulation menu again to „off". If the simulation mode is set to „Temp", the function stops automatically after approx. 3 minutes.

Connection picture

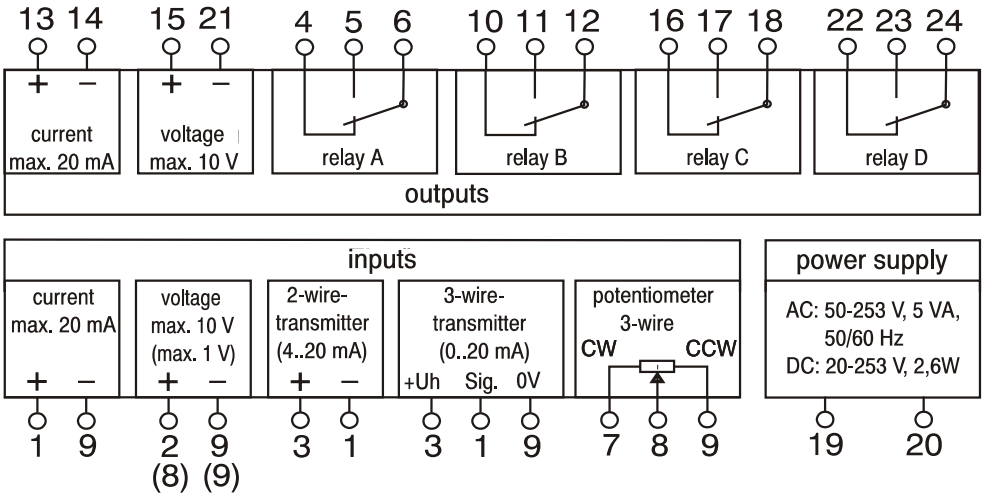

Relay outputs A and B only for the Type R2 and R4
Relay outputs C and D only for the Type R4

Terminal allocation

Terminal GF	Terminal GVF	Terminal GVC	Function
1	1	1	Input -20..20mA, 4..20mA
2	2	2	Input -10..10V
3	3	3	Sensor supply 24VDC
4	4		Relay A NC
5	5		Relay A NO
6	6		Relay A COM
7	7	4	Input potentiometer CW
8	8	5	Input potentiometer wiper, input -1..1V
9	9	6	Input potentiometer CCW, input mass
10	10		Relay B NC
11	11		Relay B NO
12	12		Relay B COM
13	13	7	Output 0/4..20mA
14	14	8	Output 0/4..20mA mass 1)
15	15	9	Output 0..10V
16	16		Relay C NC
17	17		Relay C NO
18	18		Relay C COM
19	19	10	Supply
20	20	11	Supply mass, N
21	21	12	Output 0..10V mass 1)
22	22		Relay D NC
23	23		Relay D NO
24	24		Relay D COM



1) When using both outputs, there must not be a galvanic connection between these terminals.

SALES & ADVICE
GRUBATEC
MESS- UND REGELTECHNIK

MANUFACTURER
ADAMCZEWSKI
Elektronische Messtechnik

Grubatec AG · Wölferstrasse 5 · CH-4414 Füllinsdorf
+41 55 617 00 80 · info@grubatec.ch · www.grubatec.ch

Subject to technical changes and printing errors.

Dimensional drawing

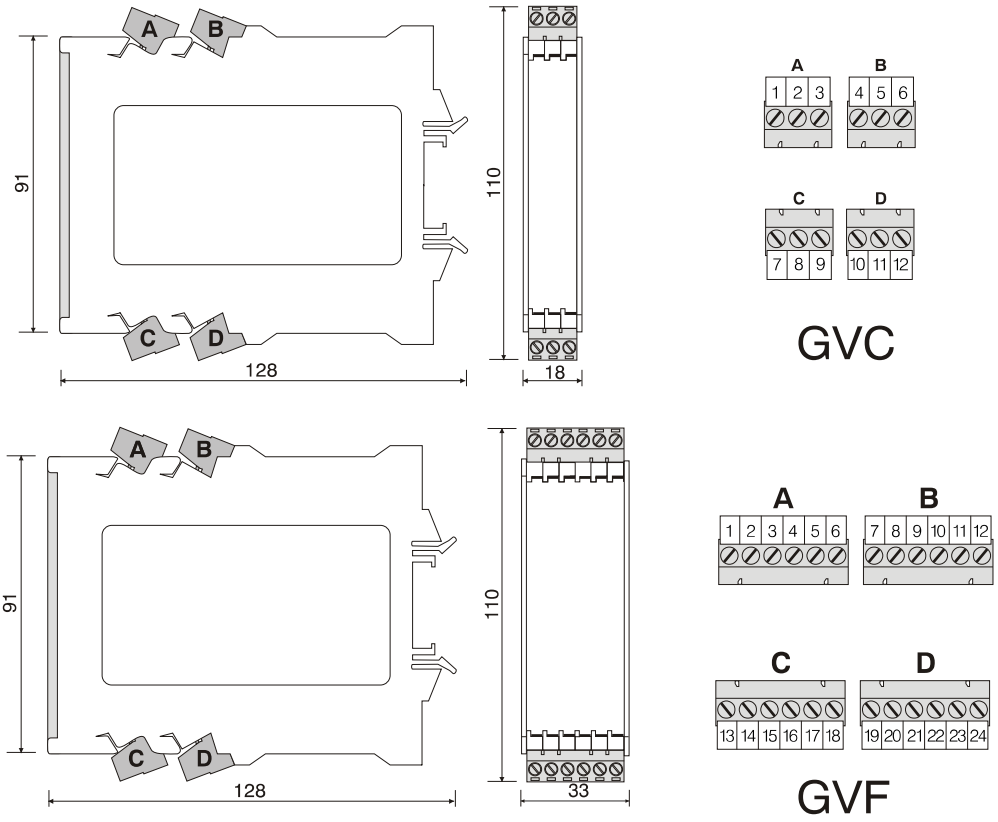

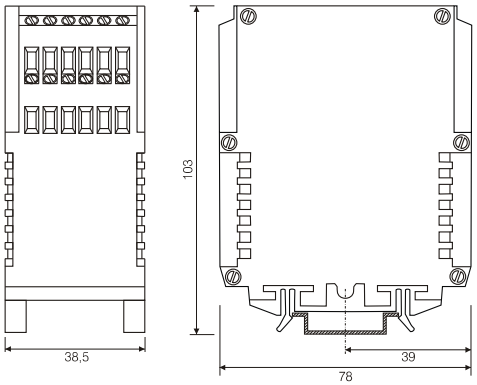

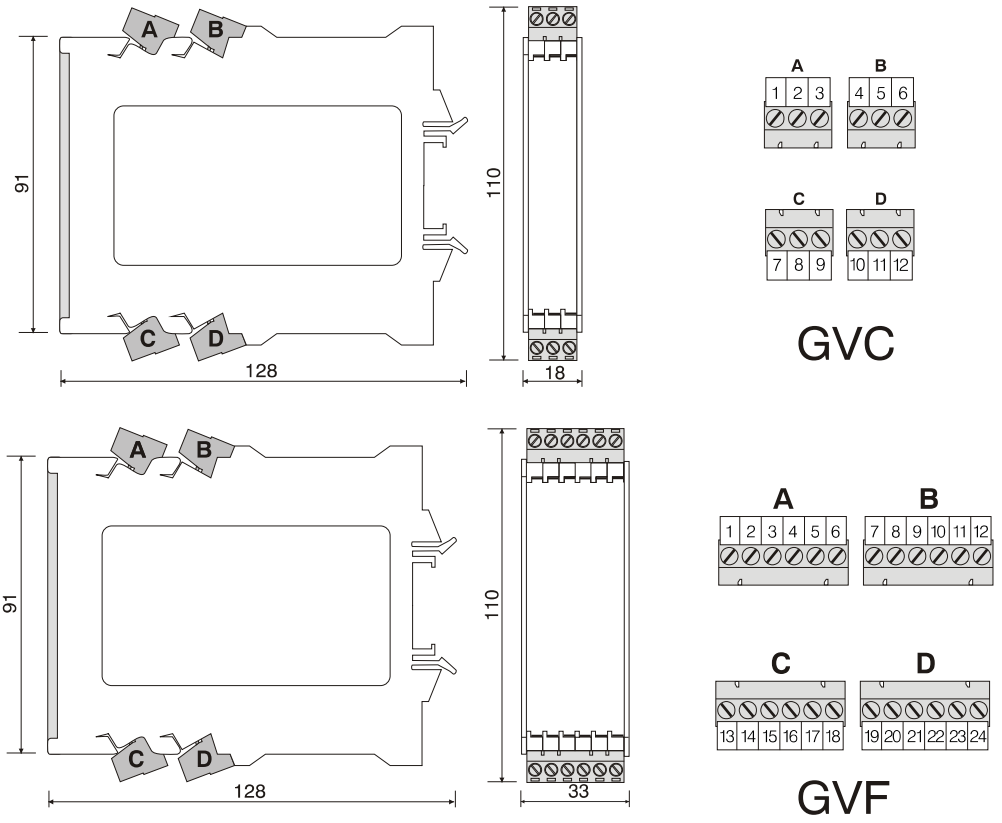
A
B
C
D
91
110
128
18
1 2 3
4 5 6
7 8 9
10 11 12
GVC
91
110
128
33
1 2 3 4 5 6
7 8 9 10 11 12
13 14 15 16 17 18
19 20 21 22 23 24
GVF

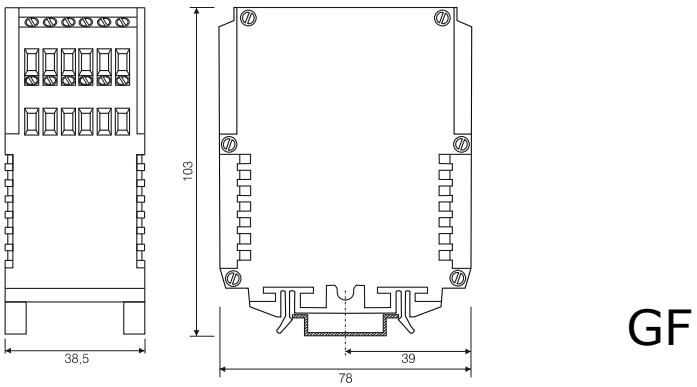
103
38,5
39
78
GF

Revisions

Revision	Date	Comment
1.0.0	01.05.2008	Document created.
1.0.1	17.09.2008	Separate parameter for response and falling off times for the relays added.
1.0.2	14.01.2009	Links to external pictures released.
1.0.3	28.01.2009	Unit lists extended with „m/s" and „km/h".
1.0.4	16.02.2009	Description of trend function added. Parameter relay function extended, parameter added to trend setting. Contents extended on 3 levels.
1.0.5	20.01.2010	Detailed description of the parameter "free unit"
1.0.6	20.02.2012	Devices without Display VC3B included.
1.0.7	06.05.2014	Devices GF with Dsiplay included. In terminal Allocation NO and NC corrected.
1.0.8	16.04.2018	Cover photo changed.