ADAMCZEWSKI GmbH
Phone +49 7046 875
Fax +49 7046 7678

- GERMANY -

Operating Instructions

Version: 1.0.0

Multi-function Temperature Transducer

AD-VC 5



AD-VC 5B



Subject to technical changes and printing errors.

Contents

About this manual....3
Function and applications....3
Features....3
Type key....4
Technical data....4
Resistance thermometer Pt100, Pt500, Pt1000 (DIN EN 60751)....4
Resistance thermometer Ni100, Ni500, Ni1000 (DIN 43760)....4
Thermocouple J, T, K, E, N, S, R, B (DIN EN 60584), Type C according ASTM....5
Voltage input +/18mV....5
Voltage input +/-36mV....5
Voltage input +/-72mV....5
Voltage input +/-144mV....5
Current output 20mA....5
Voltage output 10V....6
Relay outputs A..D....6
Response characteristic....6
Supply....6
Housing....7
Environmental conditions....7
EMC....7
Galvanic separation, test voltages....7
LCD display....7
Block diagram....8
Operating the device....8
Display and operating elements....8
Operation....8
The operating modes....9
Operating mode normal operation....9
Operating mode menu....11
Operating mode edit....11
Operating mode error indication....12
Operating mode simulation....12
Configuration....13
The menu tree....13
Device parameter....14
Device functions....18
Filtering the input signal....18
Monitoring of the input signal for measuring range and sensor break....18
User defined resistance thermometer....19
User defined thermocouple....19
User defined mV input....19
Relay function....20
Simulation....22
Connection pictures....23
Terminal allocation....24
Dimensional drawing....25
Overview of revisions....26

About this manual

In this manual, features and specifications of all variants are listed. Please note that some specifications or descriptions such as relays or LCD data for your device model may not be true. The characteristics of each device variants can be found in the model code.

Function and applications

The digital multi-function temperature transducer of series VarioCheck VC 5 are freely programmable digital measuring transformer with two analogue outputs and up to 4 limiting value relays. Alternatively, a resistance thermometer, a thermocouple or a bipolar voltage of +/-144 mV is possible as input signal. The inputs are galvanic separated from the auxiliary voltage and from the outputs. The two analogue outputs can be utilized simultaneously, however, they must not have a common reference.
The input of all characteristics is carried out directly at the device or, alternatively, via the configuration software "AD-Studio". An edit lock protects the device against undesired parameter alteration. VarioCheck fulfils all tasks of a universal and secure measuring value recording through integral function modules such as limiting value messages, freely adjustable hysteresis, window comparer, selectable relay functions, time-delayed switching, automatic or manual simulation modus, free linearising curves and a wide range of supply voltage.

Features

- Resistance thermometer inputs, types Pt/Ni 100, Pt/Ni 500, Pt/Ni 1000 or alternative resistance transducer throug entering a R/T characteristic curve
- Thermocouples inputs, types J, T, K, E, N, S, R, B, C or alternative thermocouple through entering a mV/T characteristic curve. Internal or external reference junction selectable.
- Bipolar mV - Voltage input. Input of a characteristic possible.
- Current and voltage output, differently scalable and can be utilised simultaneously
- Galvanic 3-circuit separation of input, output and supply
- LCD for display of different operating modes, lit in several colours (R/Y/B)
- Freely definable scaling of the quantity to be measured through stating range, decimal point position and unit from the list or defined unit.
- Zoom function, expanded scale, Linearizing, inverse modus
- Automatic or manual simulation operation
- Monitoring of the measuring signal with up to 4 freely adjustable limiting value (only version /R2 and /R4)
- Monitor functions, such as limiting values, window functions or signal trend, are adjustable for each relay.
- Slave pointer function (saving min. and max. value)
- Locking the parameterizing via edit lock
- Non-volatile saving of all set parameter
- Luggable and codable terminal strips
- Menu languages switchable to: German, English, French

Type key

	AD-VC 5 GVF-R0	AD-VC 5 GVF-R2	AD-VC 5 GVF-R4	AD-VC 5B GVC-R0	AD-VC 5B GVF-R2	AD-VC 5B GVF-R4
RTD: Pt100, Pt500, Pt1000 Ni100, Ni500, Ni1000 TC: J, T, K, E, N, S, R, B, C Bipolar mV-input, current and voltage output	yes	yes	yes	yes	yes	yes
Number of Relays	0	2	4	0	2	4
LCD-Display	yes	yes	yes	nein	nein	nein

Technical data

Resistance thermometer Pt100, Pt500, Pt1000 (DIN EN 60751)

Measuring range	-200 .. +850	°C
Connection method	2-, 3- or 4-wire system	
Resolution	16	Bit
Accuracy	approx. 0,5	K
Smallest measuring span	20	K
Max. resistivity	10	Ohm/wire
Sensor supply Pt100 Pt500, Pt1000	 1 210	 mA µA

*With 2 conductor, the conductor resistance enters as offset into the measuring.

Resistance thermometer Ni100, Ni500, Ni1000 (DIN 43760)

Measuring range	-60 .. +230	°C
Connection method	2-, 3-, 4-wire	
Resolution	16	Bit
Accuracy	approx. 0,5	K
Smallest measuring span	20	K
Max. resistivity*	10	Ohm/wire
Sensor supply Ni100 Ni500, Ni1000	 1 210	 mA µA

*With 2 conductor, the conductor resistance enters as offset into the measuring.

SALES & ADVICE
GRUBATEC MESS- UND REGELTECHNIK
MANUFACTURER
ADAMCZEWSKI Elektronische Messtechnik
Grubatec AG · Wölferstrasse 5 · CH-4414 Füllinsdorf
+41 55 617 00 80 · info@grubatec.ch · www.grubatec.ch

Subject to technical changes and printing errors.

Thermocouple J, T, K, E, N, S, R, B (DIN EN 60584), Type C according ASTM

Reference junction	internal external	Measuring with LM35 at the device terminals. Reference junction temperature selectable via parameter.
Resolution	16	Bit
Accuracy	approx. 0,2	% of measuring range
Measuring range type J	-200..+1200	°C
Measuring range type T	-200..+400	°C
Measuring range type K	-200..+1360	°C
Measuring range type E	-200..+1000	°C
Measuring range type N	-200..+1300	°C
Measuring range type S	-40..+1760	°C
Measuring range type R	-40..+1760	°C
Measuring range type B	+400..+1800	°C
Measuring range type C (ASTM Standard E988)	0..2320	°C
Smallest span	100	K

Voltage input +/18mV

Measuring range	-18 .. +18	mV
Resolution	16	Bit
Accuracy	approx. 20	uV
Input resistance	>1	MOhm

Voltage input +/-36mV

Measuring range	-36 .. +36	mV
Resolution	16	Bit
Accuracy	approx. 20	uV
Input resistance	>1	MOhm

Voltage input +/-72mV

Measuring range	-72 .. +72	mV
Resolution	16	Bit
Accuracy	approx. 20	uV
Input resistance	>1	MOhm

Voltage input +/-144mV

Measuring range	-144 .. +144	mV
Resolution	16	Bit

SALES & ADVICE
GRUBATEC MESS- UND REGELTECHNIK
MANUFACTURER
ADAMCZEWSKI Elektronische Messtechnik
Grubatec AG · Wölferstrasse 5 · CH-4414 Füllinsdorf
+41 55 617 00 80 · info@grubatec.ch · www.grubatec.ch

Subject to technical changes and printing errors.

Accuracy	approx. 20	uV
Input resistance	>1	MOhm

Current output 20mA

Output range	0 .. 20,4	mA
Resolution	10	Bit
Accuracy	approx. 20	uA
Maximum burden	500	Ohm
Residual ripple	20	uAss

Note: If the voltage output is used simultaneously, the two circuits must not be connected externally with each other.

Voltage output 10V

Output range	0 .. 10,2	V
Resolution	10	Bit
Accuracy	approx. 10	mV
Maximum burden	5	kOhm
Residual ripple	10	mVss

Note: If the current output is used simultaneously, the two circuits must not be connected externally with each other.

Relay outputs A..D

Version	up to 4 change-over contacts	
Max. switching voltage AC Max. switching voltage AC	250 2	V AC A AC
Max. switching voltage DC Max. switching voltage DC	50 2	V DC A DC

Response characteristic

Sampling rate	1	measurements/s
Linearity error	<0,2	% of measurement range
Temperature influence	+/-100	ppm/K of end value

Supply

Supply voltage	50..253 20..350	V AC V DC
Max. power Consumption at 24 DC	2,6	W
Max. power Consumption at 230V AC	5	VA

Housing

Dimensions WxHxD	33x110x128	mm
Material		
Build-up	DIN rail 35mm, EN 50022	
Type of protection	IP20	
Connection method	Screw clamps, can be pulled off, 5mm grid	
Clamp cross-section	Max. 2.5	mm²
Weight	Approx. 200	g

Environmental conditions

Admissible ambient temperature	-10..60	°C
Storage and transport	-10..70	°C

EMC

Product family standard	EN 61326
Discharge static electricity, ESD	IEC 61000-4-2
Electromagnetic fields 1)	IEC 61000-4-3
Quick transients, burst	IEC 61000-4-4
Impulse voltages, surge	IEC 61000-4-5
Route controlled high-frequency signals	IEC 61000-4-6
Error transmission	EN55011, CISPR11 class B, living area

1) During checking, slight signal deviations are possible.

Galvanic separation, test voltages

Input to output	2,5	kV, 1min
Input/outputs to auxiliary voltage	4	kV, 1min
Outputs among each other	none	
Input to programming interface	none	

LCD display

Resolution	42x64 pixel
Background lighting	Three-colour red, green, blue

Block diagram

The block diagram applies to all versions with relays in the GVF case.

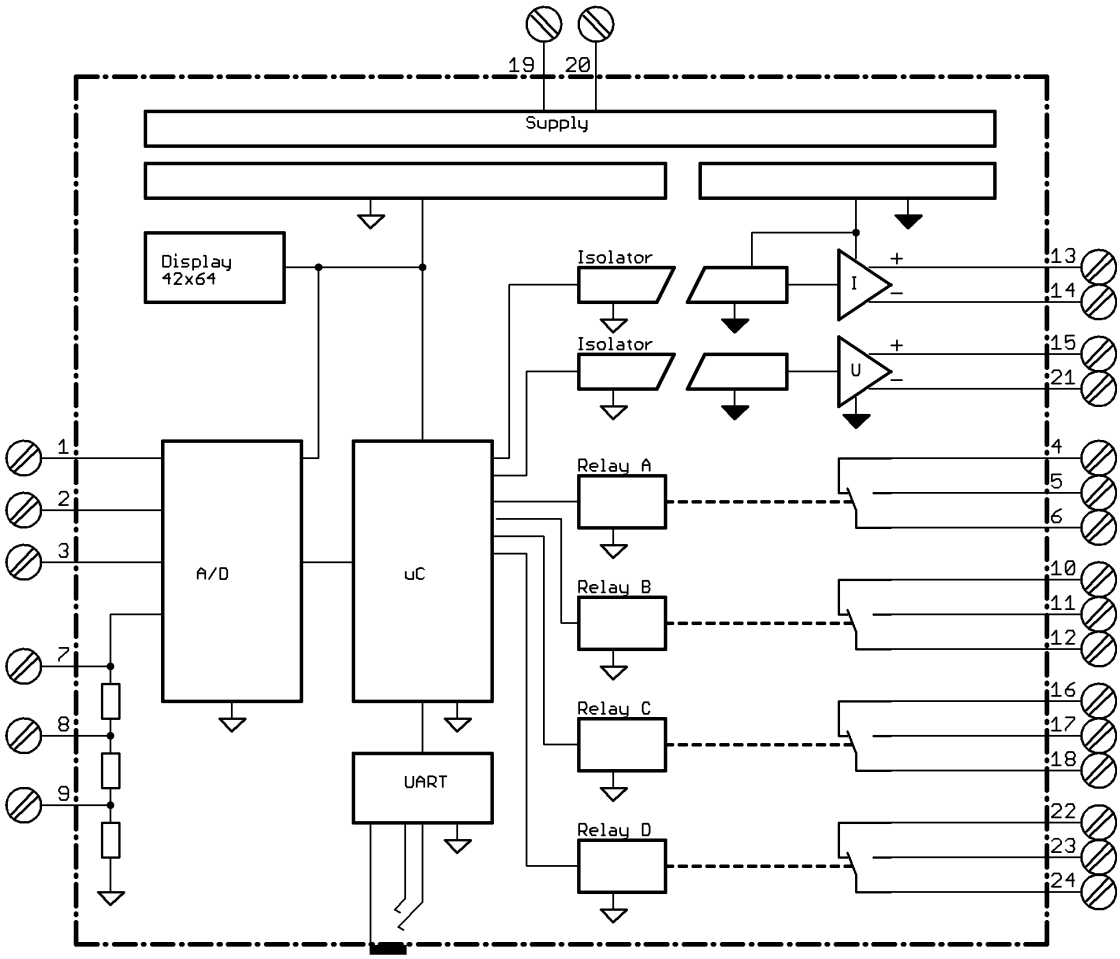

Operating the device

Display and operating elements

The device has at the front a graphic display with coloured background lighting and the communication interface for configuration through a PC, for operating three short stroke keys, for displaying the measuring value and the parameter.

Operation

The device is operated with the three keys, „up", „down" and „set". There are no combinations of keys, which have to be pressed simultaneously. The keys are pressed one at the time. The key function depends on the current operating mode. It is differentiated between a short and a long key pressure. A long key pressure is recognised after approx. 2s. Therefore, in the following, pressing the key means pressing the key briefly, key pressure > 2 seconds means a long pressure.

Key	Function
„up“	In normal operation, pressing this key returns you to the previous display. In parametrising you navigate with this to the previous menu element. When editing a parameter, the previous list element, or when incrementing a digit, the selection is made with this key. The current display is scrolled or the current parameter is incremented with a long key pressure.
„down“	In normal operation, pressing this key takes you to the next display. In parametrising you navigate to the next menu element. When editing a parameter, the next list element, or decrementing a digit, the selection is carried out with this key. The current display is scrolled or the current parameter is incremented with a long key pressure.
„set“	In normal operation, pressing the key switches on the lighting. A long key pressure changes to parametrising. In parametrising, the selected element is selected with pressing the key. A long key pressure returns you to the normal operation. During editing, pressing the key confirms the selected list element or the edited digit. A long key pressure returns you to parametrising.

The operating modes

The device is always in one of these operating modes, which are explained in more detail in the following.

- Normal operation
- Menu
- Edit
- Error indicator
- Simulation

Operating mode normal operation

After switch on, the device is in normal operation and carries out all functions set in its parameter. The indicator lighting is blue and goes off after approx. 2 minutes in standard setting, if no other key has been pressed. The first line contains the heading, the last line contains status information about relays and input signal. With the keys „up“ and „down“ you can switch between the following display views.

Display view	Display image	Comment
Scaled input signal	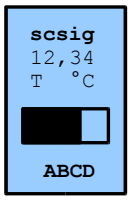	Shows the scaled input signal.
Input signal		Display of the selected input signal with unit.
Outputs	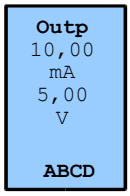	Display of both analogue output signals with unit. The calculated nominal values are shown. The device cannot recognized a short circuit or an interruption in the current loop, therefore it cannot show them.
Limiting values A/B limiting values C/D	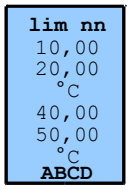	Shows the limiting values for relays A and B (only with types /R2 and /R4).
Slave pointer	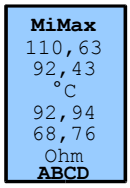	Shows the min/max values of the scaled input signal. The values can be reset with a long depression of „up“ or „down“.
Info	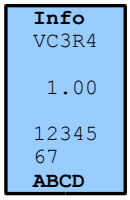	Shows the following device information: ● Type of device ● Version of firmware ● Production number

The status line

The last line in the display contains status information for the relays and the signal condition. The max. four relays are marked with the capital letters 'A'..'D'.

Mark	Meaning
1-4	● 'N' Relay N is activated (also Relays 'A', 'B', 'C' or 'D') ● 'n' Relay N has been activated (indication only when the parameter „save" has been set to „yes" for this relay). Through pressing the key „set", the flag can be deleted again. ● '-' Relays N is not activated. ● ' ' Space. No relay exists for this type of device.
5	● In normal operation, the status of the measuring signal is shown here. Arrow up/down '▲', '▼' shows that the measuring signal has exceeded/fallen below the set input measuring range. This indicator is empty in the valid range. ● 'S' is shown in simulation modus. Exceeding of the measuring range is not possible here.

Operating mode menu

A long depression of the key „set" takes you from normal operating mode to operating mode menu. The indicator lighting is yellow. In the menu tree you can navigate up and down with the keys „up" and „down". With pressing the key „set" the elements are selected. This can be a parameter, a further sub-menu or also a device function, such as contrast setting. Each menu offers as last entry the possibility to return to the previous menu. The last entry is marked with an arrow to the left „<" (see also section „The menu tree"). A long depression of the key „set" returns you to normal operating mode. If no entry is made for approx. three minutes, you are also branched to the normal operating mode.

Operating mode edit

Selecting a parameter with a short depression of the key „set" takes you from the menu to the edit modus. The indicator lighting is white. Altered parameter become effective immediately. If no entry is made for approx. three minutes, you are branched to the menu again.

Parameter	Indicator image	Comment
Numeric parameter	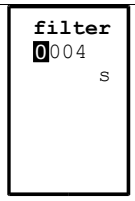	The current digit, which can be edited, is shown inverse and can be incremented or decremented with the keys „up" and „down". When the last edited digit is confirmed with „set" and the digit has passed the data check, the parameter is taken over. A long depression on the key „set" cancels the entry and returns to the menu.
Lists	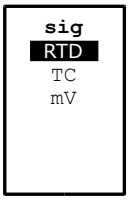	The current list element is shown inverse and can be altered with the keys „up" and „down". If the current list element is confirmed with the key „set", the selected entry is taken over. A long depression on the key „set" cancels the entry and returns to the menu.

Operating mode error indication

After an error has occurred, you get to the error indication. The indicator lighting is red.

Type of error	Indicator image	Comment
Input error	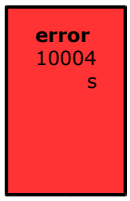	The faulty value is shown and must be confirmed through pressing the key „set".
Signal error	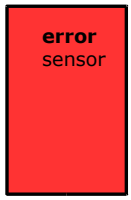	If a line interruption is recognized by the signal control, it is indicated. The word „sensor" appears in the display. The key „set" suppresses the error for approx. 3 minutes. If the error subsequently still exists, the indication appears again. The indication only appears if the device is in normal operation, not in the menu. If the error is eliminated, the unit goes automatically into normal operation again.

Operating mode simulation

With setting the relevant parameter in the menu you get to the operating mode simulation. The indicator lighting is orange. If an over-range occurs in normal operation, a capital 'S' is shown here on the right in the status line instead of an arrow.

Type of simulation	Indicator image	Comment
On, Auto	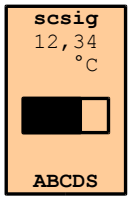	To switch on the simulation, go to the simulation menu and set the parameter for the simulation mode to „On" or „Auto". The simulation is ended through setting the simulation mode to „off" again, or when in simulation mode „Auto" the simulation time of approx. three minutes has expired.

Configuration

The menu tree

The illustrated menu tree contains all menu elements as diagram. However, dependent on setting and device type, not all menu elements are illustrated in the device. The menu is accessed from the normal operation through pressing the key „set" for a longer duration. Through pressing the key „set" briefly, either the submenu or the edit mode of the relevant parameter is accessed. Selecting the arrow to the left „<" at the end of each menu returns you to the higher menu.

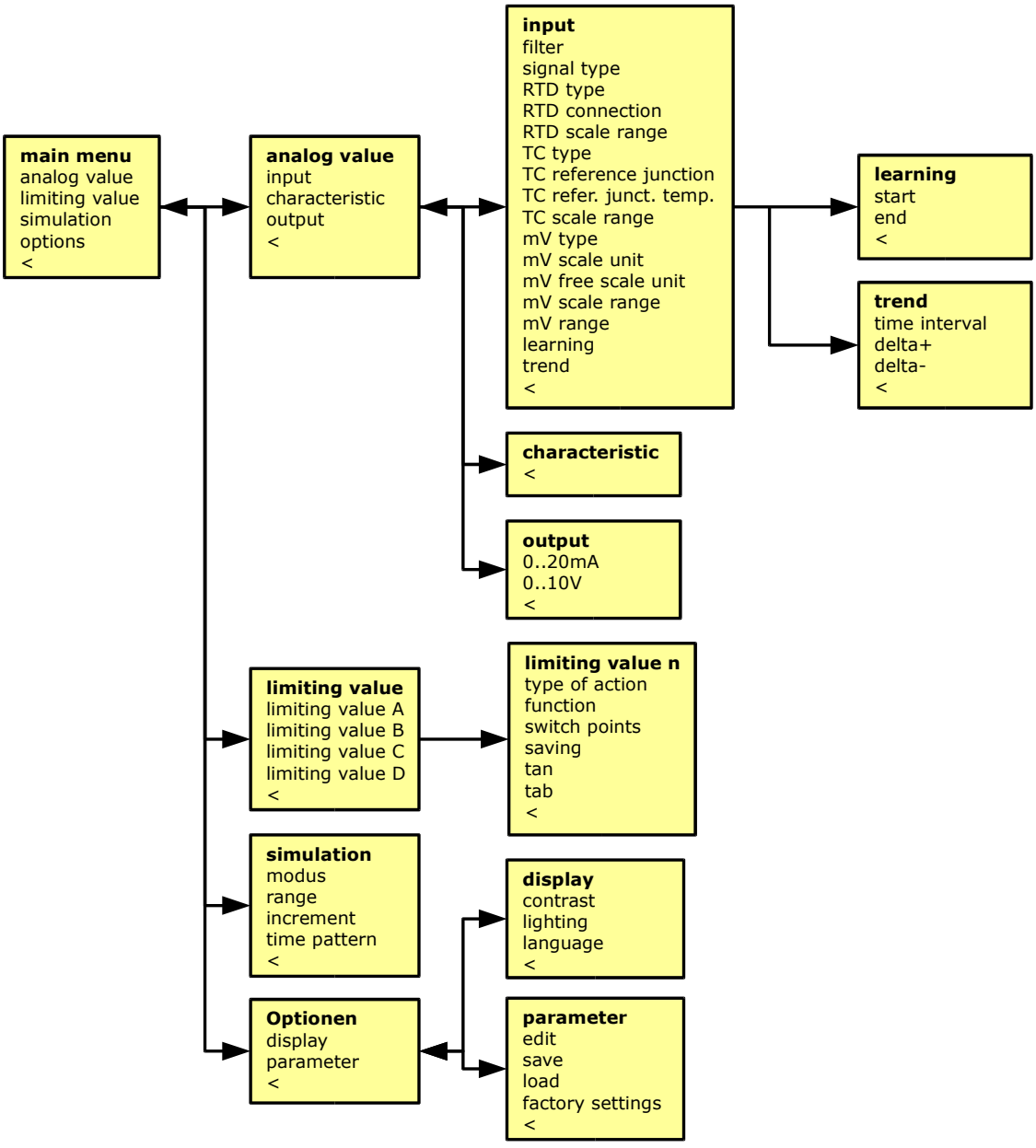

Device parameter

The following describes the device parameter and device functions, which can be altered or executed in the menu.
Note: altered device parameter become effective immediately, even if you are still in the menu.

Input

Name	Factory setting	Range	Unit	Comment
Filt	2	1..1000	s	Input filter. 1 switches the filtering off.
Sig	„RTD“	„RTD“ „TC“ „mV“		Selection of input signal. Resistance thermometer, thermocouple or mV-input.
RTD type 1)		„Pt100“, „Pt500“, „Pt1k“, (Pt1000) „Ni100“, „Ni500“, „Ni1k“, (Ni1000) „R/T“		Selection of resistance thermometer. When selecting „R/T“, the user defined R/T-characteristic is used.
RTD connection 1)	„3“	„2“ „3“ „4“		Type of RTD connection method. 2-, 3- or 4-conductor method.
RTD scale range 1)	Pt, alle Typen: 0..100 Ni, alle Typen: 0..100 R/T: 0..100	-200..850 -60..230 -200..1500	°C °C °C	Scaled measuring range of the resistance thermometer.
TC type 2)	„J“	„J“, „T“, „K“, „E“, „N“, „S“, „R“, „B“ „C“ „U/T“		Selection of thermocouple type. When selecting „U/T“, the user defined U/T-characteristic is used.
TC modus 2)	„int“	„int“ „ext“		Internal or external reference junction.
TC Tv 2)	25	0..100	°C	Temperature of the external reference junction. Is only used if the external reference junction is selected.
TC scale range	type J: 0..500 type T: 0..200	-200..1200 -200..400	°C °C	Scaled measuring range of the

2)	type K: 0..500 type E: 0..500 type N: 0..500 type S: 0..500 type R: 0..500 type B: 500..1500 type C: 0..1500 U/T: 0..500	-200..1360 -200..1000 -200..1300 -40..1760 -40..1760 +400..1800 0..2320 -200..1500	°C °C °C °C °C °C °C °C	thermocouple.
mV type 3)	„144mV“	„18mV“, „36mV“, „74mV“, „144mV“, „U/Sk“		Selection of mV measuring range. If „U/Sk“ selected, the user defined mV/Sk characteristic is used.
mV SEUnit 3)	„%“	„°C“, „°F“, „%“, „mA“, „V“, „mV“, „Ohm“ „A“ „ ?“		Scale unit of the mV signal. If the last input „?“ is selected, the string entered as unit in fS is shown.
mV fSUnit 3)	„ ?“	5 ASCII-Zeichen 32 bis 126, also Leerzeichen ' ' bis Tilde '~'.		Free scale unit. To use the free scale unit, the last unit from the list („ ?“) must be selected under „SEinh“.
mV scale range 3)	0..100	-999999..9999999		Scaled measuring range of the mV-input. The unit is determined under SEinh or fSEin.
mV range 3)	18mV: -18..18 16mV: -36..36 72mV: -72..72 144mV: -144..144 U/Sk: -144..144	-18..18 -36..36 -72..72 -144..144 -144..144	mV mV mV mV mV	Measuring range of the mV-input.

1) Appears only with sig = „RTD“.
2) Appears only with sig = „TC“.
3) Appears only with sig = „mV“.

Learning

Name	Comment
Start	The current measuring value is shown. Pressing „set“ takes over the measuring value as measuring range start.
End	The current measuring value is shown. Pressing „set“ takes over the measuring value as measuring range end.

Trend

Name	Factory setting	Range	Unit	Comment
time	1	1..100000	s	Time slot pattern in which the trend is ascertained cyclical.
Delt+	1	0,00001.. 9999999	°C or SEinh	Value signal difference in scaled unit for recognition of a rising trend.
Delt-	1	0,00001.. 9999999	°C or SEinh	Value signal difference in scaled unit for recognition of a falling trend.

Characteristic curve

With signal = „RTD" and type = „R/T", up to 24 R/T value pairs can be entered in the characteristic.

Name	Factory setting	Range	Unit	Comment
1..24	R: 0 T: 0	0..4000 -200..2000	Ohm °C	Resistance values and temperature values of the user defined R/T characteristic.

With signal = „TC" and type = „U/T", up to 24 U/T value pairs can be entered in the characteristic.

Name	Factory setting	Range	Unit	Comment
1..24	U: 0 T: 0	-144..144 -200..2000	mV °C	Voltage values and temperature values of the customer defined U/T characteristic.

With signal = „mV" and type = „U/T", up to 24 U/Sk value pairs can be entered, whereby Sk is the scaled magnitude.

Name	Factory setting	Range	Unit	Comment
1..24	U: 0 S: 0	-144..144 -999999.. 9999999	mV Skal.-einheit	Voltage values and scaled values of the user defined U/Sk characteristic.

Output

Name	Factory setting	Range	Unit	Comment
Output 0..20mA	0..20	0..20,4	mA	Current output range
Output 0..10V	0..10	0..10,2	V	Voltage output range

Limiting value n

Name	Factory setting	Range	Unit	Comment
Type of action n 1)	„Work“	„act“ „pass“		Action relay n. Full-load current or closed-circuit current.
Function n 1)	„Hyst“	„off“ „hyst“ „windo“		Action relay n. No relay editing, hysteresis or window comparer.
Switch points n 1)	A: 10.0/20.0 B: 30.0/40.0 C: 50.0/60.0 D: 70.0/80.0		% % % %	Switch points relays A..D in scaled units.
Saving n 1)	„No“	„no“ „yes“		Save responded relays in the display as lower case letter.
Response time n 1)	0	0..9999	s	Time delay before the relay responds.
Release time n 1)	0	0..9999	s	Time delay before the relay releases.

1) n = 1..2 with device variant /R2 and 1..4 with device variant /R4.
2) For further explanations see status line.

Simulation

Name	Factory setting	Range	Unit	Comment
Modus	„Off“	„Off“ „On“ „Auto“		Determines the operating mode of the simulation. Simulation off, temporary (switches itself off after approx. 3 minutes) or constant
Range	0..100	-999999.. 9999999	°C oder SEinh	Simulation range in scaled units.
Increment	1	0,00001.. 9999999	°C oder SEinh	Simulation increment in scaled units.
Time slot pattern	1	1.9999	s	Simulation time slot pattern

Display

Name	Factory setting	Range	Unit	Comment
Contrast	50	0..100	%	Display contrast is altered during setting and is permanently saved through confirming with „set“. A long depression of the key „set“ cancels the value.

Lighting	„Auto“	„Off“ „On“ „Auto“		Display lighting permanently off, permanently on or automatic off approx. Three minutes after the last key has been pressed.
Language	„de“	„de“ „en“		Indicator language German, English or French+.

Parameter

Name	Factory setting	Range	Unit
Edit	„Yes“	„No“ „Yes“	Edit parameter release or barring.
Save		„No“ „Yes“	Save current device parameter in the EEPROM.
Load		„No“ „Yes“	Load device parameter from the EEPROM.
Factory setting		„No“ „Yes“	Execute function „factory setting“. The current device parameter are overwritten with the works values. A reset is carried out afterwards.

Device functions

Filtering the input signal

The input signal is transformed to a digital value via an analogue digital transducer and is filtered digital prior to any further processing. The raw value of the A/D-transducer is filtered during each programme through-run with the following function:

$$X_t = \frac{X_t + X_{t-1} * (F-1)}{F}$$

whereby X is the A/D-transducer value, t is the time of the current measuring, t-1 is the time of the last measuring and F is the filter value. The connection between the filter digit F and the response time on 90% of the final value with a jump of the input signal from 0% to 100%

$$t_{90} = F * 2{,}2\bar{6} * t_Z$$

whereby t_Z is the cycle time of the data acquisition of 1s with VC 5 GVF.

Monitoring of the input signal for measuring range and sensor break

Resistance thermometer, thermocouple and mV input are monitored for exceeding or falling below the set measuring ranges and for sensor break. Dependent on error, the device triggers the following reactions.

Error	Reaction
Exceeding the measuring range	The indicator shows an up arrow '▲' in the status line. The measuring value is shown up to the maximum possible value. The analogue outputs are limited to the end of the output range. The relays work normally.
Falling below the measuring range	The indicator shows a down arrow '▼' in the status line. The measuring value is shown up to the minimum possible value. The analogue outputs are limited to the beginning of the output range. The relays work normally.
Sensor break.	The display changes to the error indication. The analogue outputs are set to t 21,5mA / 10,75V. The relays are switched off. In the variants VC 5B, the green power LED ist blinking.

User defined resistance thermometer

Resistance thermometer, which do not exist in the list, can be reproduced through a R/T table. Through selecting „X/Y" from the list of resistance thermometer, the user defined table for resistance thermometer is activated. Under „Kennl" in the analogue menu, up to 24 support points can now entered as value pairs with the unit Ohm and °C. The resistance must lie within a range of 0..4000Ω, the temperature within -200..+2000°C. The number of points is freely selectable, however, there should be sufficient supports available for illustrating the characteristic. The temperature ascertained via the characteristic is transferred linear to the output via the set measuring range. Terminal 7 is to be used for feeding(-).

Example: A KTY-2000 probe is to be used for monitoring the room temperature. The temperature range of 0..50°C is to be read out on the current output as analogue value of 4..20mA. The limiting value function (only device type /R2 or /R4) is to switch on the relay at T > 23°C and switch it off again at T < 20°C.
Settings:

- Under „Haupt/Analo/Eing/Sig" select input signal „RTD".
- Under „Haupt/Analo/Eing/RTD/Typ" mit „X/Y" select the user defined resistance thermometer.
- Under „Haupt/Analo/Kennl" enter the characteristic of the KTY probe.
  1495Ω/-10°C; 1630Ω/0°C; 1772Ω/10°C; 1922Ω/20°C; 2000Ω/25°C; 2080Ω/30°C; 2245Ω/40°C; 2418Ω/50°C; 2598Ω/60°C
  Note: the characteristic is reproduced with 9 points for the interesting range, however, more points can also be used.
- Under „Haupt/Analo/Eing/Ber" enter the measuring range of 0..50°C.
- Under „Haupt/Analo/Ausg/20mA" enter the output range of 4..20mA.
- Under „Haupt/Grenz/Gw A/Grenz" enter the switch points 20..23°C.

User defined thermocouple

Thermocouples, which do not exist in the list, can be reproduced through a R/T table. Through selecting „X/Y" from the list of thermocouples, the user defined table for thermocouples is activated. Under „Kennl" in the analogue menu, up to 24 support points can now be entered as value pairs with the units mV and °C. The voltage must be within a range of -144..+144 mV, the temperature within -200..+2000°C. The number of points is freely selectable, however, there should be sufficient support points available for illustrating the characteristic. The temperature ascertained via the characterisic is transferred linear to th eoutput via the set measuring range.

User defined mV input

The voltage input can be linearised via a table. Through selecting „X/Y" from a list of mV inputs, the user defined table for mV signals is activated. Under „Kennl" in the analogue menu, up to 24 supports points can be entered as value pairs with the units mV and the scaled unit. The voltage must lie within a range of -144..+144 mV. There is no limitation for the scaled unit. The number of points is freely selectable, however, there should be sufficient support points available for illustrating the characteristic.

Relay function

The relay function can be set for each single relay. The terms „active" and „passive" or „not active" refer to the logic of the limiting value function. Whether the relay responds or releases during activated function depends on the setting of the type of action for this relay. Here, full-load current means responded with activated function and not responded with not activated function. With closed-circuit current the reverse is true.

Hysteresis function

The hysteresis function becomes active when the measuring value has exceeded the upper switch point and the on-delay "tan" has expired. It becomes passive again when the measuring value falls below the lower switch point and the drop-out delay "tab" has expired.

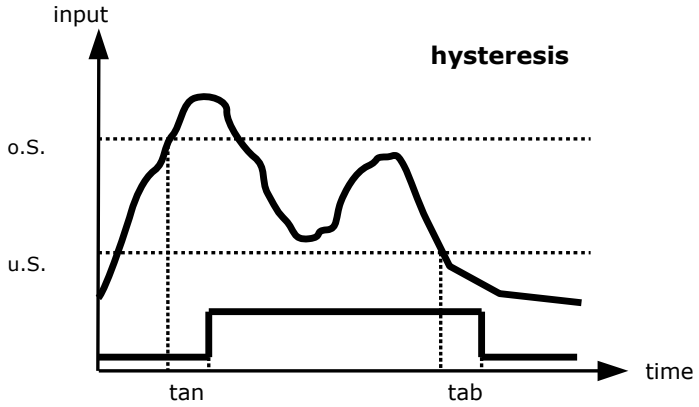

Window function

The window function becomes active when the measuring value lies between the upper and the lower switch point and the on-delay "tan" time tvon is expired. It becomes passive again when the resuming value falls below the lower switch-point or the upper switch point is exceeded and the drop-out delay "tab" is expired.

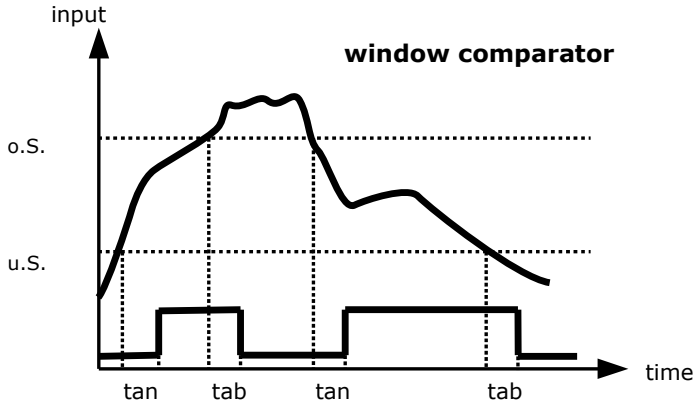

Trend function

The trend function shows the trend of the input signal over time. For this, the present measuring value is frozen at certain intervals, the trend time, and at the end of the trend time, the frozen value is compared to the current measuring value, plus or minus a parametrisable trend difference. This comparison results in a rising, falling or invariable trend.

$$rising\ trend = data_t > (data_{(t-trend\ time)} + trend_{rising})$$
$$falling\ trend = data_t < (data_{(t-trend\ time)} - trend_{falling})$$

otherwise

$$constant\ trend$$

In normal mode, the trend can be read off in the display for the input signal and the scaled input signal in the unit line left, underneath the numerical value of the signal. The arrow up „▲" means rising signal trend, the arrow down „▼" means a falling signal trend and the equal sign „=" means an invariable signal trend. For parametrising the trend function, three parameter are available, „Trend time", „Trend rising" and „Trend falling". The trend information rising, falling or invariable signal can also be displayed through the relay outputs. For this, the relay function of the corresponding entry must be selected from the list. Each relay can take on a different relay function, for instance, relay A can show the rising trend, relay B can show the invariable trend. In the illustration, relay A is configured for display of rising trends and relay B is configured for display of an invariable trend.

Note: The trend information is only determined at the end of the trend time. With long trend times, this can possibly lead to confusion, if the trend of the monitored signal reverses several times during the trend time, when the trend of the last interval is still displayed.

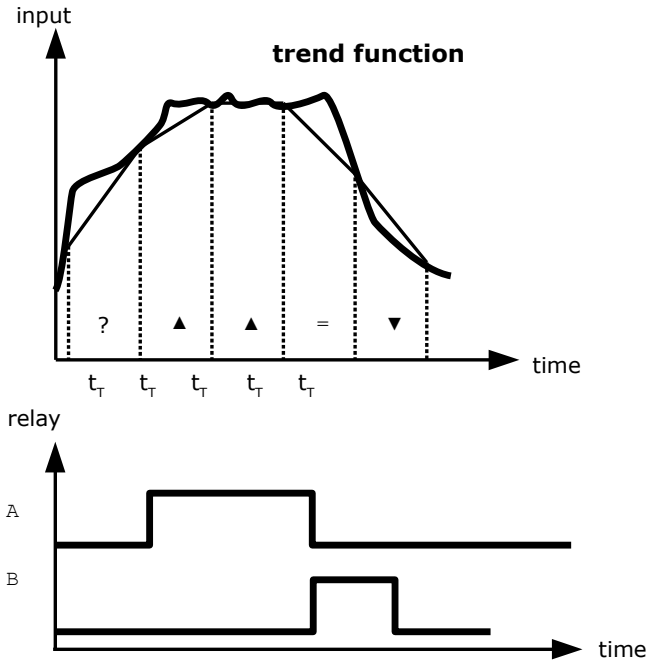

Simulation

In simulation mode, the VC 3 GVF offers the possibility to specify the scaled value manually. This possibility is an important aid, for instance, during commissioning, when there are still no, or not the required, measuring values available from the process.
Note: All other device functions such as limiting value, editing and analogue output remain functioning without limitation, as if the scaled value had been derived from the measuring value. This characteristic can be utilised very well, for instance, for the nominal value specification at the analogue output.

Setting the simulations parameter

To set the simulation parameter, the parameter from the simulation menu must be checked or altered. Set the simulation modus to „Temp", when the simulation mode is to be cancelled automatically after approx. 3 minutes and the device returns to normal mode. Set the simulation modus to „Const" when the simulation mode should remain permanently switched on.
The limits for the simulation value are set with the simulation range. The increment determines the increment, around which the manual or automatic incrementing/decrementing is carried out. The time slot pattern specifies in seconds the interval during automatic incrementing/decrementing.
Note: The simulation modus is saved non-volatile. After switching the device off and then on again, it is still in simulation modus!

Starting Simulation

After the simulation modus has been set to „On" or „Auto", long depression of the „set" in the menu. Instead of changing to the normal mode, the device now goes into simulation mode and displays the scaled value.
Note: the last value from the normal mode is taken over as starting value in simulation mode.

Specifying the simulation values manually.

Starting with the start value, the simulation value is increment or decrement by the increment through pressing the key „up" or "down".

Shutting the simulation values down automatically as ramp

With a long pressure on the key „up" or "down", the simulation value in the specified time slot pattern is automatically incremented or decremented. If the simulation value has reached the end or the beginning of the simulation range, the direction reverses automatically. The automatic mode can be ended again with pressing the key „up" or „down".

Stopping the simulation

The simulation can be stopped through setting the simulation modus in the simulation menu again to „off". If the simulation mode is set to „Auto", the function stops automatically after approx. 3 minutes.

Connection pictures

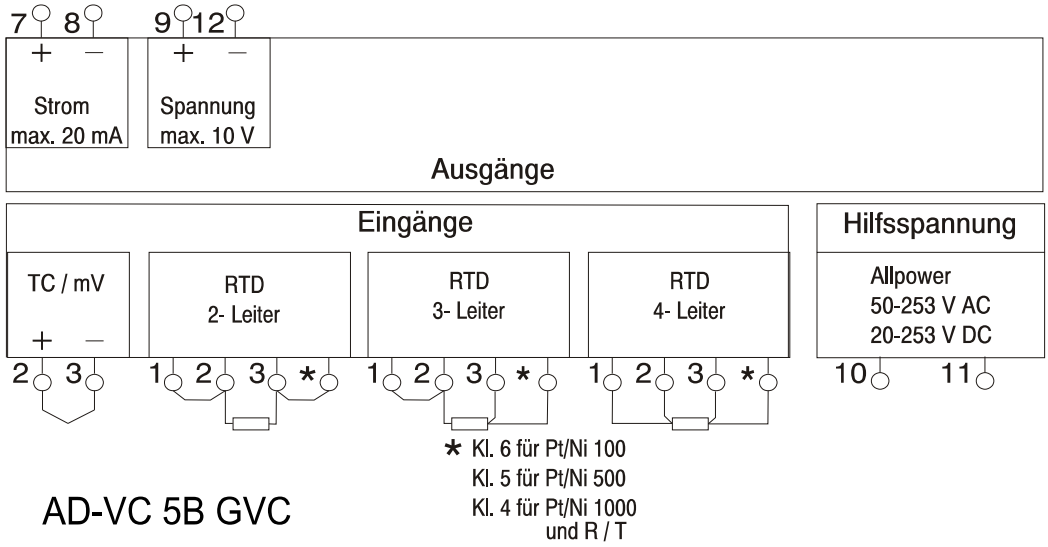

AD-VC 5B GVC

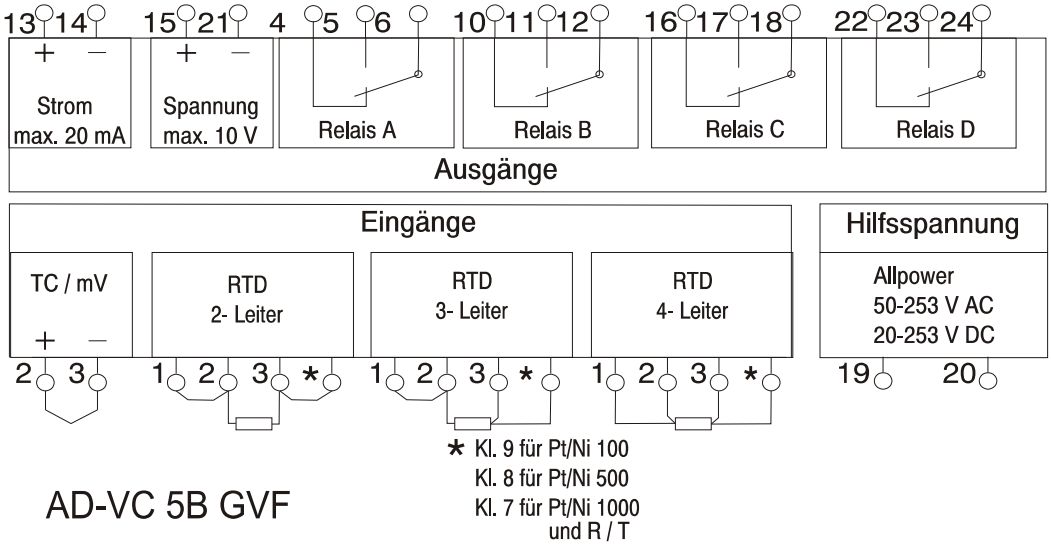

AD-VC 5B GVF

Terminal allocation

Terminal GVF	Terminal GVC	Function
1	1	Supply (+) Resistance thermometer, all types
2	2	Input (+) for resistance thermometer, mV and thermocouple
3	3	Input (-) for resistance thermometer, mV and thermocouple
4		Relay A NO
5		Relay A NC
6		Relay A COM
7	4	Supply (-) resistance thermometer Pt1000, Ni1000 and user-defined resistance thermometer.
8	5	Supply (-) resistance thermometer Pt500, Ni500
9	6	Supply (-) resistance thermometer Pt100, Ni100
10		Relay B NO
11		Relay B NC
12		Relay B COM
13	7	Output 0/4..20mA
14	8	Output 0/4..20mA ground 1)
15	9	Output 0..10V
16		Relay C NO
17		Relay C NC
18		Relay C COM
19	10	Power-supply
20	11	Power-supply ground, N
21	12	Output 0..10V ground 1
22		Relay D NO
23		Relay D NC
24		Relay D COM



1) When using both outputs, there must not be a galvanic connection between these terminals.

SALES & ADVICE
GRUBATEC
MESS- UND REGELTECHNIK

MANUFACTURER
ADAMCZEWSKI
Elektronische Messtechnik

Grubatec AG · Wölferstrasse 5 · CH-4414 Füllinsdorf
+41 55 617 00 80 · info@grubatec.ch · www.grubatec.ch

Subject to technical changes and printing errors.

Dimensional drawing

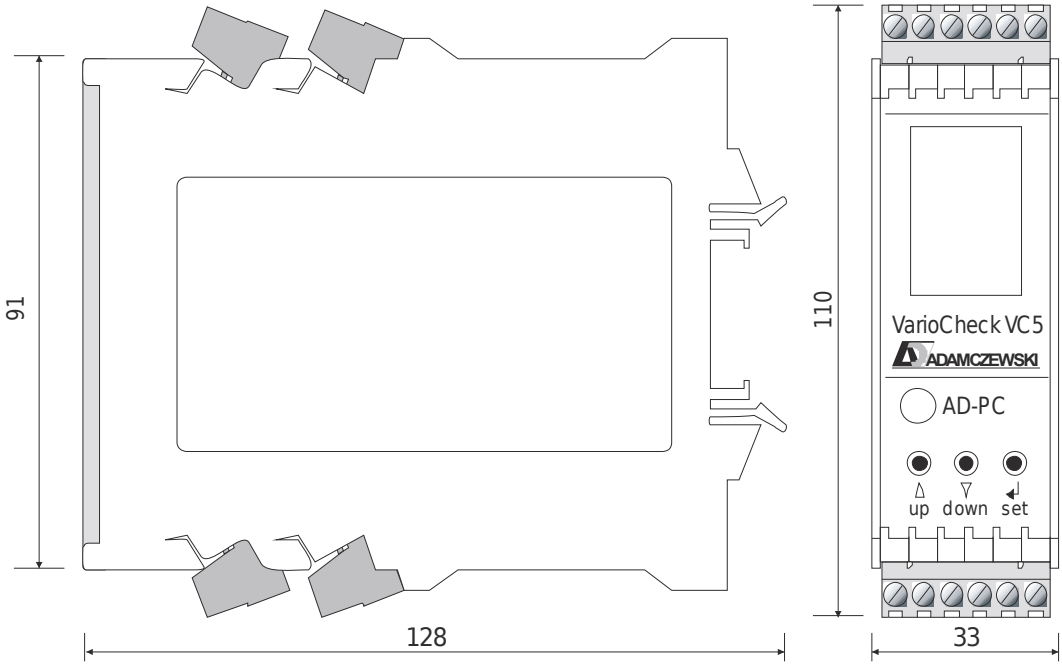

Overview of revisions

Revision	Date	Comment
1.0.0	23.07.2009	Document created
1.0.1	02.11.2010	Thermocouple type C added. Response to probe break changed.
1.0.2	19.03.2012	Variants for VC 5B added.