Operating Instructions
Version: 1.0.6

Multi-channel display device

VarioShow®

Type: AD-VS 8–A1 (1 channel)
Type: AD-VS 8–A4 (4 channel)
Type: AD-VS 8–A8 (8 channel)

Type: AD-VS8A4 – S (4 channel)
(with integrated transmitter supply)

Type: AD-VS8A4 – G (4-channel)
(with galvanically insulated current inputs)



SALES & ADVICE
GRUBATEC MESS- UND REGELTECHNIK

MANUFACTURER
ADAMCZEWSKI Elektronische Messtechnik

Grubatec AG · Wölferstrasse 5 · CH-4414 Füllinsdorf
+41 55 617 00 80 · info@grubatec.ch · www.grubatec.ch

Subject to technical changes and printing errors.

Contents

Function and applications ... 3
Type key ... 3
Technical data ... 4
Commissioning ... 5
Operating the device ... 5
- **Display and operating elements** ... 5
- **Operating** ... 5
- **Switching over the operating language** ... 6
- **The different operating modes** ... 6
  - **Normal mode** ... 6
  - **Programming mode** ... 7
  - **Signal input selection** ... 7
  - **Counter operation** ... 7

Programming ... 8
  - **Programming block diagram** ... 8
  - **Programming block diagram (counter activated)** ... 9

Changing parameters ... 10
  - **Input signal** ... 10
  - **Input manual** ... 10
  - **Input teach-in** ... 10
  - **Scaling** ... 10
  - **Filter** ... 11
  - **Characteristic** ... 11
  - **Counter** ... 11
  - **Tendency** ... 12
- **Function parameter** ... 12
  - **Password** ... 12
  - **Default setting (reset)** ... 12
  - **Display (autoscroll, lighting, contrast, language)** ... 12

Connection diagram AD-VS8A1…A8 (view from the back) ... 13
Terminal allocation ... 13
Connection diagram AD-VS8A4-S (view from the back) ... 14
Terminal allocation ... 14
Connection diagram AD-VS8A4-G (view from the back) ... 15
Terminal allocation ... 15
Dimensions ... 16
Applications ... 16

Subject to technical changes and printing errors.

Function and applications

The VarioShow® is a freely programmable digital display unit for up to 8 input signals.
For each channel, voltages up to 10 V and analogueue currents up to 20 mA are possible as input signals.
Each channel can be parameterised separately and each measuring signal is displayed in a freely definable scaling. The menu guided parameterisation level, shown in plain language, convinces through easy and operator friendly build-up. The input of all characteristic values is carried out directly at the unit without aids. A code word, which can be activated, protects the device against undesired parameterisation modifications. Due to integral function components such as scaling, linearisation, tendency display, automatic scroll function and the supply voltage range of 20-253 VDC or 50-253 VAC, independent of location, the VarioShow® fulfils all tasks of an universal, multi-channel process display.
All configuration data can be read, modified and filed in archives via a PC or laptop.

In summary, the VarioShow AD-VS 8® shows the following functions:

- selectable voltage input or current input each channel
- each channel usable as counter
- up to 4 channels with galvanically insulated current inputs or with integrated transmitter supply (option -G , -S)
- limiting the measuring range (zoom)
- freely definable scaled display via different display modes
- display of the measured analogue value
- parameterisation of a tendency display each channel
- linearised illustration over 24 x/y points
- slave pointer function each channel (minimum / maximum memory)
- selectable quasi-analogue display via angle bar
- selectable participation to autoscroll technique for each channel
- background illuminated grey LCD-display with high contrast value
- locking of parameterisation via password
- saving of all set parameter
- status memory after power fail
- PC interface (special interface cable not supplied), free of charge operating software
- operating languages German, English and French (set at the device)

Type key

Please note that all device features are listed in these operating instructions, including those which your device possibly does not have.
The following device variants are available:

Type	Hardware
AD-VS8A-1	1 analogue input: current (up to 20 mA) or voltage (up to 10V) freely selectable
AD-VS8A-4	4 analogue inputs: for each channel current (up to 20 mA) or voltage (up to 10V) selectable
AD-VS8A-8	8 analogue inputs: for each channel current (up to 20 mA) or voltage (up to 10V) selectable
AD-VS8A4-S	4 analogue inputs: for each channel current (up to 20 mA) or voltage (up to 10V) selectable with integrated transmitter supply, **without galvanic isolation**
AD-VS8A4-G	4 analogue inputs: for each channel current (up to 20 mA) or voltage (up to 10V) selectable with galvanically insulated current inputs

Technical data

Type of construction	Control panel housing acc. To DIN 43 700 for front frame	48 x 96 mm
	Dimensions (W x H x D)	91.5x43x131 mm
	mounting	with 2 retaining brackets
	Control panel cutout: 92x44 mm	control panel thickness 1.5-10 mm
	Weight	approx. 230 g
Connection	Terminal cross section	2.5 mm² for circuit terminal, all others 1.5 mm²
Environmental conditions	Admissible ambient temperature	0 ...+50°C
	Storage and transport	-30°C ... +80°C (no dewing)
Electrical protective measures	Protection classification	II
	Type of protection	front IP 65, terminal IP 20
Supply voltage	Wide range	20-253 VDC or 50-253 VAC
Terminal 31, 32	Power intake	max. 1.2 W or 3.0 VA
	Power intake (with transmitter feeding)	max. 5.0 W or 7.0 VA
Transmitter supply (VS8A4-S)	20...17 V (at 4...20 mA), max. 25 mA	
Measuring inputs	resolution, precision	10 bit, 0,2 %
Counter input	voltage, frequency	max. 30 V, max. 2 Hz
	shape, duty cycle	any, 50%
Analogue voltage	nominal value, Ri	10 V, 100 kOhm
Analogue current	nominal value, Ri	20 mA, 121 Ohm (AD-VS8A4-G: 230 Ohm)
Channel separation	proof test voltage, current inputs (only VS8A4-G)	500V, 1 min
Function of each channel	display of measured analogue value display of scaled measured quantity as numerical value (high-order digits) display of scaled quantities as quasi-analogue bars display of measuring tendency display of channel description and of scaling unit display of minimum and maximum values display of a linearised measuring value (over 24 x/y points) filter functions	
Display	graphic-LCD, background lighting	grey 122x32 pixel
	digital display	5 digit (6 in counter mode), freely configurable
	scaling unit	freely selectable from list
Galvanic isolation, test voltages	Signal/auxiliary voltage	4 kV, 1 min

EMC (CE-conformity)

Product family standard	EN 61326
Emitted interference	EN 55011, CISPR11 Cl. B

During electromagnetic disturbance minor changes in output signal are possible

Electrical safety requirements

Product family standard	EN 61010-1

Commissioning

Switch off the voltage supply prior to any connection work.
Ensure sufficient contact protection of the connections during set-up.
The current supply and the measuring inputs must be provided with suitable overvoltage protection.
All connections must be protected against electro-static discharge.
This device has been constructed and tested according to DIN EN 61010-1 (protective measures for electronic measuring devices) and has left the works in a safety-technical perfect condition. To retain this condition and to ensure a danger free operation, the user must observe the notes contained in these operating instructions.
The commissioning must be carried out by personnel sufficiently trained. Connection and maintenance work must only be carried out with switched off current supply.
The device is according to protection classification II for fixed connection on site. The connection between a possibly available protective conductor connection and a protective conductor must be established prior to any other connections.
The device is supplied ready for fitting. It does not need to be opened for connection nor for input of characteristic values.
Fitting is possible in any position, however, not in the immediate vicinity of sources of strong interference.
The display is designed for installation in dry spaces, i.e. control panels, frames or cabinets.

The multi-channel displays „VarioShow®“ must generally be installed outside explosion-endangered areas!

The interface is potential connected with the inputs. To prevent error functions of the device, the PC, with which the device is parameterized, must not have any galvanic connection to the input signals!

Operating the device

Display and operating elements

The device is provided with three short-stroke keys for operating, which are hidden underneath the membrane, and a graphic display with background lighting for displaying the measuring value and the parameter.



Operating

The unit can be completely parameterised and set via the three keys „up“, „down“ and „set“.
The keys have the following functions, dependent on the current operating mode:

Key	Function
„up“	In normal mode, the channels are changed with this key. Each channel is shown in the same display mode (i.e. all in capital number or all in drag pointer etc.) The device function is not influenced by this. In parameterising mode, a menu input or list elements can be selected with this key, or a number can be edited. If this key is depressed longer than approx. 3 seconds in normal mode, the autoscroll mode is started. The channel view changes every “n“-seconds to the next channel (n = adjustable from 1-31 seconds, default setting = 5s).
„down“	As key „up“ just in other direction
„set“	By depressing the „set“-key briefly, you can change each display mode in one channel, i.e. quasi-analogue bar, capital number, „real“ measuring value or drag pointer. By depressing the key „set“ for longer (>3s), you change from normal mode to parameterising mode and back again, if you want to return before time, without running through the entire menu tree. This key also has the function of a confirmation key for numeric inputs or when selecting an element from a list.

SALES & ADVICE
GRUBATEC
MESS- UND REGELTECHNIK
MANUFACTURER
ADAMCZEWSKI
Elektronische Messtechnik
Grubatec AG · Wölferstrasse 5 · CH-4414 Füllinsdorf
+41 55 617 00 80 · info@grubatec.ch · www.grubatec.ch

Subject to technical changes and printing errors.

Switching over the operating language

The VarioShow is equipped with three language modules at the works: German, English and French. The operating language is set by pressing the 3 operating keys simultaneously for a few seconds. The switchover can be carried out in any window. The changing of the language is equally possible on programming: parameter → functions → display ½ → language.

The different operating modes

The device is always in one of the three operating modes „normal mode“, „Auto-Scroll“ or „Parameterising“. After switching on the device it is in „normal mode“. An activated “autoscroll” will be continued.

Normal mode

In normal mode the device carries out all functions set according to its parameter. With the keys „up“ and „down“ you can switch between the different input channels. Depressing the key „set“ briefly you change the different types of display in the relevant channel.
On counter mode just the standard view is visible. The comma is furthermore usable.
By pressing the keys up an down at once:
- On counter view, the counter will be reset
- On drag pointer view, the drag pointer will be set to the actual input value.

View	Display image	Comment
Standard	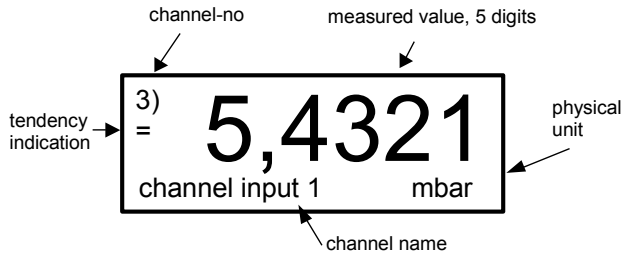	After switching on the device it goes into normal mode and shows the standard display of the device. In counter mode, the counter value is showed and the tendency indicator displaying the input level.
Quasi analogue	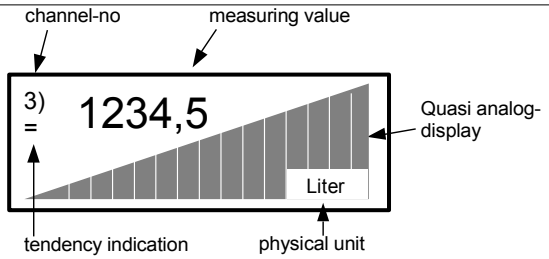	In mode „Quasi analogue display“ an angle bar appears, which shows the measuring range.
Drag pointer	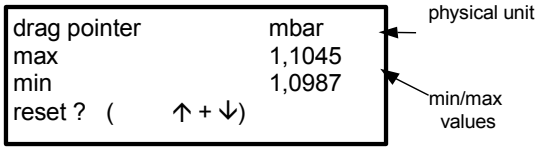	The drag pointer function is active immediately after starting the device. To start the drag pointer function at a certain time, activate the keys „up“ and „down“ for approx. 3 s simultaneously. This sets the minimum value and the maximum value to the current measuring value.
Input signal	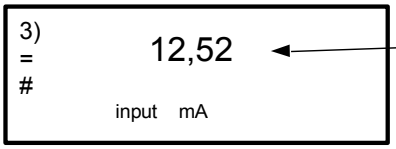	In this window the actual measured input signal is shown (unscaled).
Input failure	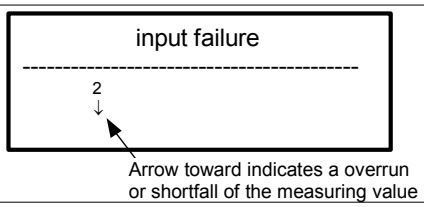	If the input signal is outside the engaged physical range, the message „Input failure” appears. By depressing any key the message disappears, however, it appears again after 3 minutes if the error is still present.

SALES & ADVICE
GRUBATEC MESS- UND REGELTECHNIK
MANUFACTURER
ADAMCZEWSKI Elektronische Messtechnik
Grubatec AG · Wölferstrasse 5 · CH-4414 Füllinsdorf
+41 55 617 00 80 · info@grubatec.ch · www.grubatec.ch

Subject to technical changes and printing errors.

Programming mode

The programming mode is accessed from the normal mode by depressing the key „set“ for a longer time (>3s).
Ensure that first the desired channel is selected in normal mode and then press the key for a few seconds.
A switching over to other channels is not possible within the parameterising level!
The active channel number is visible in the upper left corner.
Global parameter and parameter trees has no channel number.
Numeric or alpha numeric letters can be changed by an incremental function by pressing key up or down for a longer time (>3s).
Altered parameter will be stored on the confirmation of the last letter position and will be effective immediately.
By keypress „set“ for a longer time (>3s) the normal mode is again reached, if you do not want to run through the entire menu tree.
The settings carried out will be accepted under the following conditions:

Numeric values	If the menu is excited with the navigation keys and when the values are valid. If the menu is exited by depressing the key „set“ for longer (>3s), normal mode is again reached, whereby possibly altered values are discarded.
List elements	Always if the key „set“ has been activated. The key „set“ (>3s) discards the selection and returns to normal mode.
String elements	Always if the last character is confirmed. The key „set“ (>3s) discards the selection and returns to normal mode.

Signal input selection

On each alteration, begin and end will be changed **automatic** in realtime to the physical input limits.

Input signal selection	Begin / Limit Low	End / Limit High
4 - 20 mA (current terminal)	4 mA	20 mA
0 - 20 mA (current terminal)	0 mA	20 mA
0 - 10 V (voltage terminal)	0 V	10 V
24 V (voltage terminal)	8 V	9 V
NAMUR (current terminal)	1,2 mA	2,1 mA

Counter operation

Each analog input channel is usable as digital counter. Choose NAMUR or 24V as input signal.
You can use any physical input signal. As needed change analog begin and analog end to define the switch limits of pulse counting. The pulse source must send an active signal (current or voltage).
Any way the transmitter feeding voltage of then VS8A4-S is also usable to feed a passive contact.
A pre-setting of the counter is possible under: parameter 1/2 → analog 2/2 → counter.
The characteristic of the channel at the counter operation is not usable.

Programming

The following paragraph shows the menu tree of the device. Navigation is carried out according to the connection arrows of the menu tree.

Programming block diagram

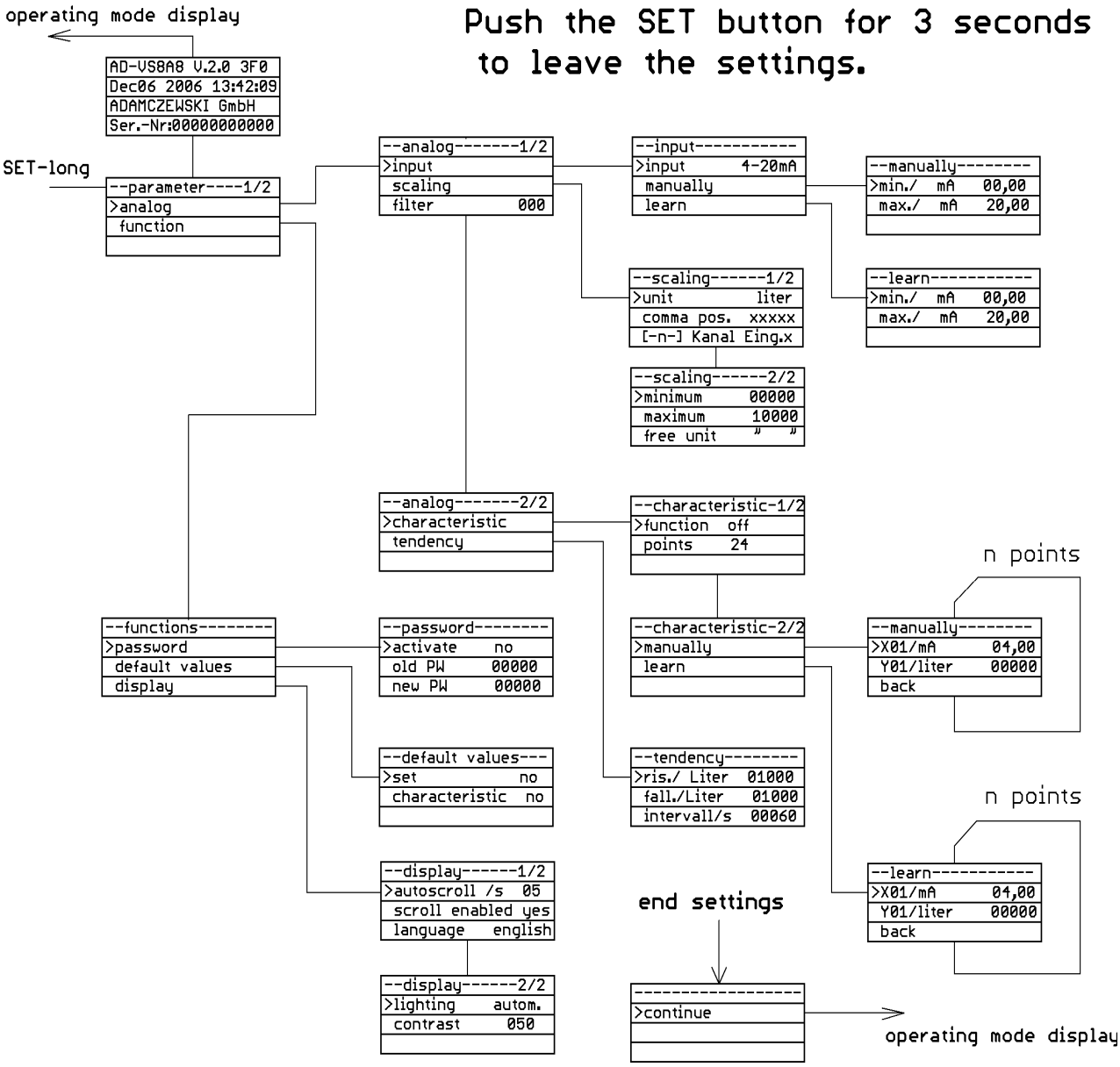

Programming block diagram (counter activated)

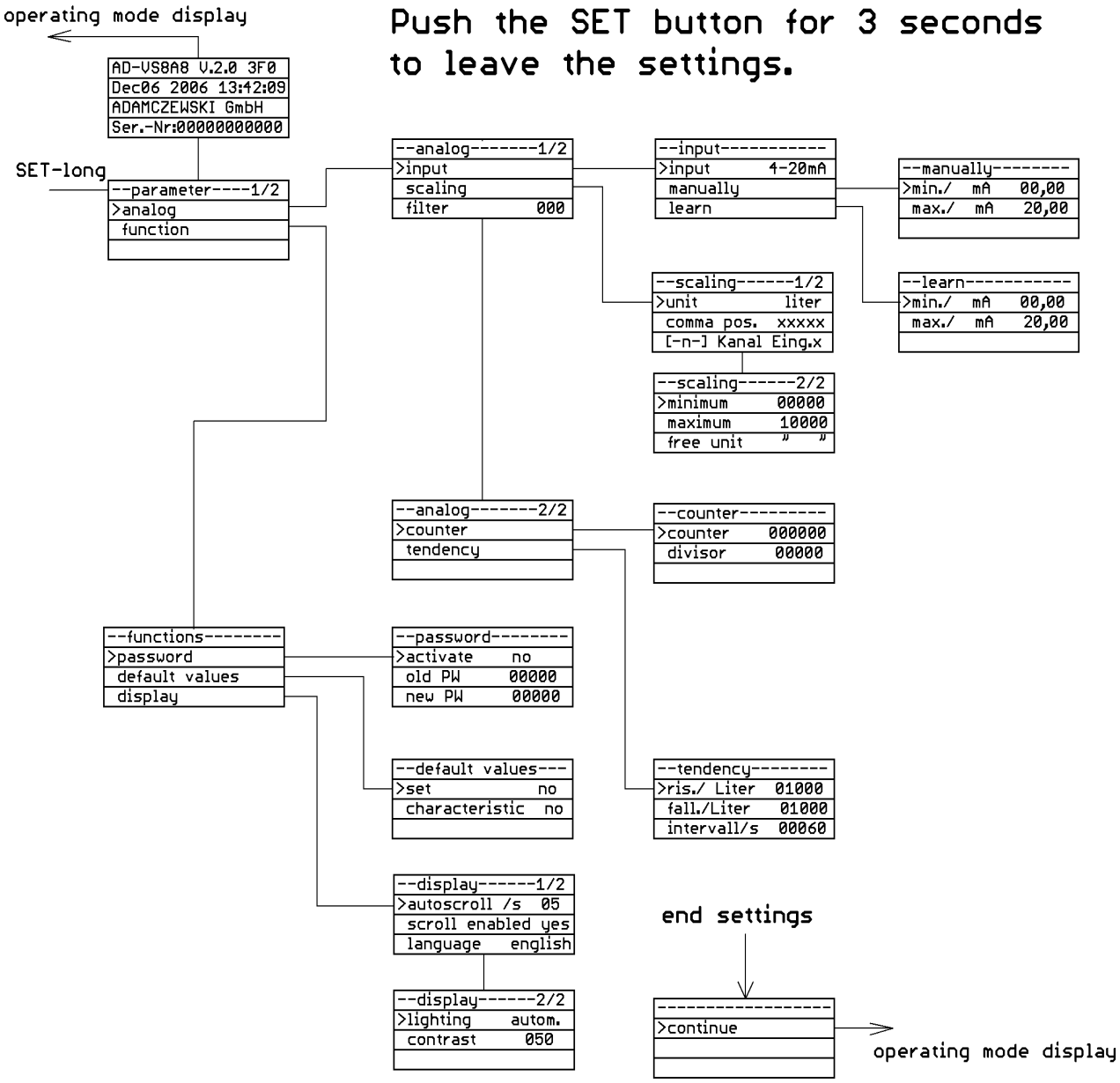

Changing parameters

Input signal
In this menu point the applied input signal is selected.

Parameter	Unit	Admiss. value range	Default setting	Comment
Input	-	4-20 mA, 0-20 mA 0-10 V, 24V, NAMUR	0-20 mA	

Input manual
In this menu the measuring range minimum and the measuring range maximum can be set numerically.

Parameter	Unit	Admiss. value range	Default setting	Comment
Minimum	Unit of the selected input signal	0..20 mA or 0-10 V	0 mA	Used as limit of LOW level in counter mode
Maximum	mA	0..20	20 mA	Used as limit of HIGH level in counter mode

Input teach-in
In this menu the measuring range minimum and the measuring range maximum can be accepted. Here the currently existing measuring value serves as default value.

Parameter	Unit	Admiss. value range	Default setting	Comment
Minimum	mA	approx. 0..20.5	0	The current input current can be accepted as minimum with the key „set“.
Maximum	mA	approx. 0..20.5	20	The current input current can be accepted as maximum with the key „set“ .

Scaling
In this menu the measuring value can be linear scaled and a physical unit can be allocated to it.

Parameter	Unit	Admiss. value range	Default setting	Comment
Scaling unit	-	„Litre“ „cbm“ „%“ „mWS“ „mm“ „cm“ „m“ „mbar“ „bar“ „psi“ „``WC“ „MPa“ „°C“ „mV“ „V“ „mA“ „l/s“ „l/min“ „cbm/h“ „kg“ „t“ „??? 1 “	„Liter“	The desired unit can be selected from a list. Alterations of this list with future company ware versions are possible. The last unit can be freely defined via the PC programming software. free editable string over manual or PC

Parameter	Unit	Admiss. value range	Default setting	Comment
Commapos.	-	„XXXXX“ „XXXX,X“ „XXX,XX“ „XX,XXX“ „X,XXXX“	„XXXXX“	The comma position of the scaled measuring value can be selected from a list.
[-Cannel-]	String	any	no change	free name of the monitoring executive
Scaling minimum	Selected scaling unit	-9999..99999	0	The scaling minimum can be greater than the scaling maximum.
Scaling maximum	selected scaling unit	-9999..99999	10000	The scaling maximum can be smaller than the scaling minimum.
free unit	string	any	??? n	any 5 letter string each channel

Filter

In this menu the filter value can be determined, with which the input signal is filtered.
The measuring value is linked with the filter value prior to further processing:

Measuring value(i) = (measuring value(i) + (filter value) * measuring value(i-1)) / (filter value+1)

Measuring value(i) = current measuring value
Measuring value(i-1) = last measuring value
Filter value = number between 0..999

To determine the connection between filter value and build-up time, the interval between two scans must be considered. With the following rule-of-thumb, the build-up time can be determined:
build-up time in s = filter value / 2

Parameter	Unit	admiss. value range	Default setting	Comment
filter	-	0..999	0	The greater the entered number, the greater is also the filter effect.

Characteristic

In this menu, up to 24 points can be entered for linearisation of the display. Alternatively, one of two fixed characteristics (horizontal cylindrical tank or ball tank) can be selected.
The entered points will not be overwritten by the default setting.
In counter mode this tree will be invisible.

Parameter	Unit	Admiss. value range	Default setting	Comment
function	-	„off“ „table“ „horiz. cyl.“ „ball“	„off“	„off“ switches the characteristic processing off. Table activates the user-defined table. „cylinder horizontal” or „ball tank“ activates a fixed characteristic for a lying round tank or a ball tank.
points	-	3..24	24	Number of points of the user defined table.
Xn	mA (V)	0..20 (0-10)	none	X-value of the current point of the user defined table.
Yn	scaling unit	scaling range	none	Y-value of the current point of the user defined table.

Counter

The counter tree will only be displayed if the physikal input signal 24V or NAMUR is activated.
The prescaler is used as input divisor.

Parameter	Unit	Admiss. value range	Default setting	Comment
counter	scale unit	0...999999	0	to preset the counter value
divisor	-	1...99999	1	prescaler value

Tendency

For configuration of the tendency display. The delta of the measuring values is specified for each time unit, for the rising as well as the falling tendency.

Parameter	Unit	Admiss. value range	Default setting	Comment
ris./unit	Selected unit	Selected measuring range	1000 Liter	A tendency direction is displayed only after the measuring value alteration has run through the value of the delta in the defined period.
fall./unit	Selected unit	Selected measuring range	1000 Liter	A tendency direction is displayed only after the measuring value alteration has run through the value of the delta in the defined period.
interval/s	s	1 - 65535	60	The period in which the measuring value must be altered by the delta to trigger a display.

Function parameter

Password

In this menu the password can be altered and the password interrogation can be activated/deactivated.

Parameter	Unit	Admiss. value range	Default setting	Comment
Activating	-	„no“ „yes“	no	The password interrogation is activated/deactivated. When editing a parameter with activated switch, you will be asked to enter the password. Then you can edit for the next 3 minutes without entering the password again.
Old password	-	00000..99999	none	You will be led to this field to enter the password if the password is activated. If you want to change the password, enter the same value in „old password“ and „new password“. **This field receives a device dependent number on entering the menu. If you have forgotten the password, you will receive a password valid for one time from the manufacturer when quoting this number.**
New password	-	00000..99999	none	If you want to change the password, enter the same value in „old password“ and „new password“.

Default setting (reset)

In this menu the device can be reset to the parameter of the default setting, to obtain a defined basic condition. The value, which is set during this, is stated with all parameter in the column „default setting“.

Parameter	Unit	Admiss. value range	Default setting	Comment
set	-	„ no“ / „yes”	no	With „Yes“, all parameter with default setting are described on exiting the menu, the device carries out a reset and then goes into normal mode.
characteristic	-	„ no“ / „yes”	no	With „Yes“, all parameter with default setting are described on exiting the menu, the device carries out a reset and then goes into normal mode.

Display (autoscroll, lighting, contrast, language)

Display settings (ad rotation, lighting, contrast)

Parameter	Unit	Admiss. value range	Default setting	Comment
autoscroll	s	1 - 31	5	Display time of each channel. At least two channels has to activated in this mode.
ad rotation (autoscroll)		„no“ / „yes“	yes	Autoscroll participation of each channel
language		DE/EN/FR	no change	Selection of language in list
lighting		autom./on	autom.	Automatic display cut-off after 3 min. This function can be permanent switched on with the setting „on“
contrast		0…100%	50%	Display contrast settings

Connection diagram AD-VS8A1…A8 (view from the back)

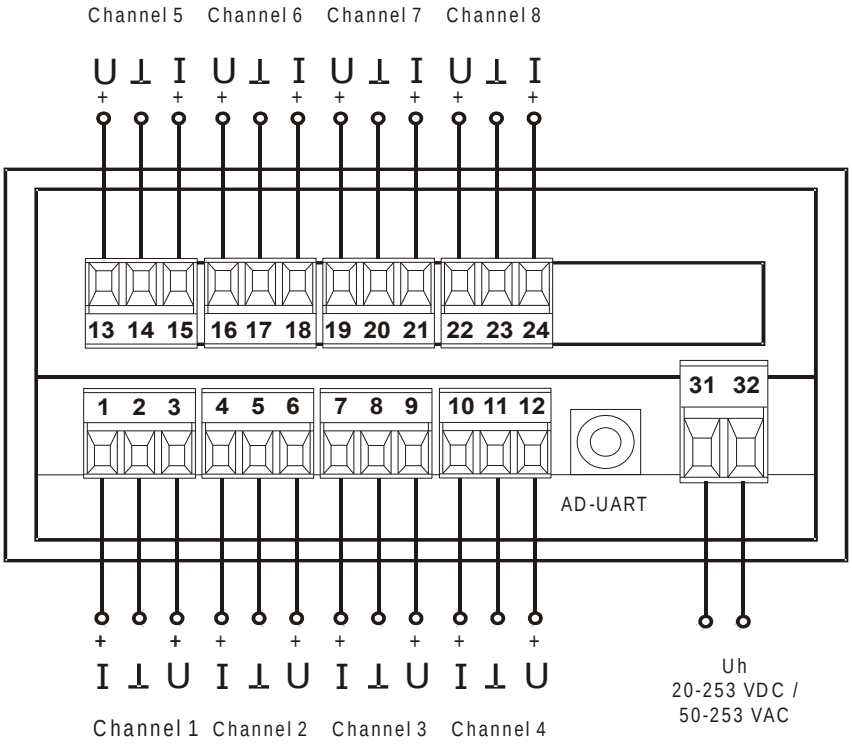

Terminal allocation

Terminal no.	Function	Comment
1	+ Ie 1	Positive pole current input channel 1
2	- Ie1 / Ue1	Negative pole current / voltage channel 1
3	+ Ue1	Positive pole voltage input channel 1
4	+ Ie 2	Positive pole current input channel 2
5	- Ie2 / Ue2	Negative pole current / voltage channel 2
6	+ Ue2	Positive pole voltage input channel 2
7	+ Ie 3	Positive pole current input channel 3
8	- Ie3 / Ue3	Negative pole current / voltage channel 3
9	+ Ue3	Positive pole voltage input channel 3
10	+ Ie 4	Positive pole current input channel 4
11	- Ie4 / Ue4	Negative pole current / voltage channel 4
12	+ Ue4	Positive pole voltage input channel 4
13	+ Ie 5	Positive pole current input channel 5
14	- Ie5 / Ue5	Negative pole current / voltage channel 5
15	+ Ue5	Positive pole voltage input channel 5
16	+ Ie 6	Positive pole current input channel 6
17	- Ie6 / Ue6	Negative pole current / voltage channel 6
18	+ Ue6	Positive pole voltage input channel 6
19	+ Ie 7	Positive pole current input channel 7
20	- Ie7 / Ue7	Negative pole current / voltage channel 7
21	+ Ue7	Positive pole voltage input channel 7
22	+ Ie 8	Positive pole current input channel 8
23	- Ie8 / Ue8	Negative pole current / voltage channel 8
24	+ Ue8	Positive pole voltage input channel 8
31	Uh	Supply voltage wide range power pack
32	Uh	20-253 V DC or 50-253 V AC
A	RS 485	Interface (optional)
B	RS 485	Interface (optional)

Connection diagram AD-VS8A4-S (view from the back)

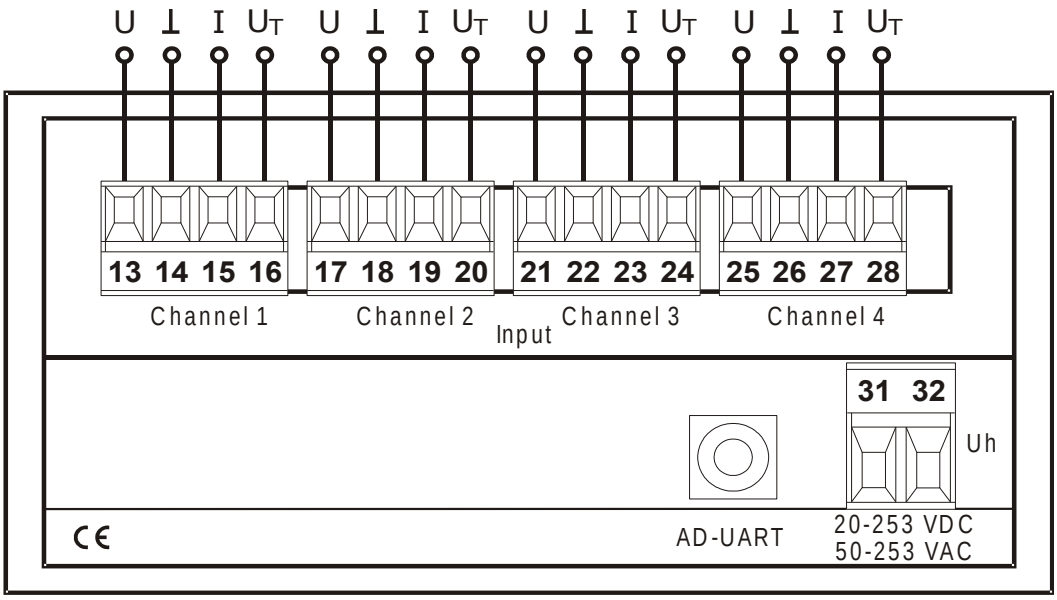

Terminal allocation

Terminal no.	Function	Comment
13	+ U 1	Positive pole current input channel 1
14	- Ie 1 / Ue 1	Negative pole current / voltage channel 1
15	+ Ie 1	Positive pole current input channel 1
16	+ U_T 1	Positive pole transmitter supply channel 1
17	+ U 2	Positive pole current input channel 2
18	- Ie 2 / Ue 2	Negative pole current / voltage channel 2
19	+ Ie 2	Positive pole current input channel 2
20	+ U_T 2	Positive pole transmitter supply channel 2
21	+ U 3	Positive pole current input channel 3
22	- Ie 3 / Ue 3	Negative pole current / voltage channel 3
23	+ Ie 3	Positive pole current input channel 3
24	+ U_T 3	Positive pole transmitter supply channel 3
25	+ U 4	Positive pole current input channel 4
26	- Ie 4 / Ue 4	Negative pole current / voltage channel 4
27	+ Ie 4	Positive pole current input channel 4
28	+ U_T 4	Positive pole transmitter supply channel 4
31	Uh	Supply voltage wide range power pack 20-253 V DC or 50-253 V AC
32	Uh	

Connection diagram AD-VS8A4-G (view from the back)

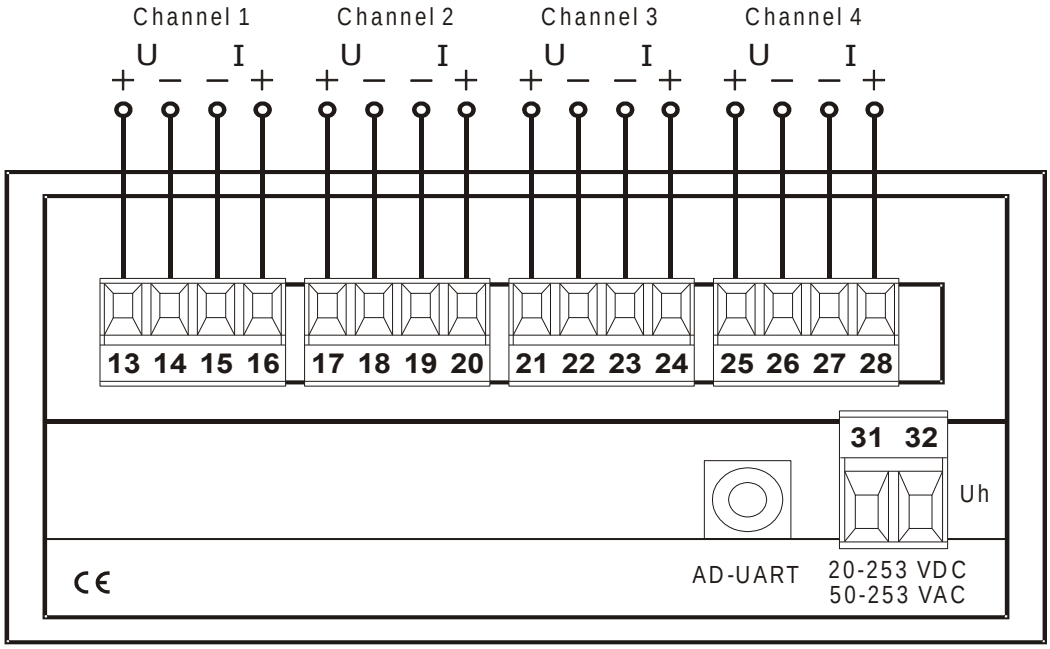

Terminal allocation

Terminal no.	Function	Comment
13	+ Ue 1	Positive pole voltage input channel 1
14	- Ue 1	Negative pole voltage inputchannel 1
15	- Ie 1	Negative pole current input channel 1
16	+ Ie 1	Positive pole current input channel 1
17	+ Ue 2	Positive pole voltage input channel 2
18	- Ue 2	Negative pole voltage inputchannel 2
19	- Ie 2	Negative pole current input channel 2
20	+ Ie 2	Positive pole current input channel 2
21	+ Ue 3	Positive pole voltage input channel 3
22	- Ue 3	Negative pole voltage inputchannel 3
23	- Ie 3	Negative pole current input channel 3
24	+ Ie 3	Positive pole current input channel 3
25	+ Ue 4	Positive pole voltage input channel 4
26	- Ue 4	Negative pole voltage inputchannel 4
27	- Ie 4	Negative pole current input channel 4
28	+ Ie 4	Positive pole current input channel 4
31	Uh	Supply voltage wide range power pack 20-253 V DC or 50-253 V AC
32	Uh	

Dimensions

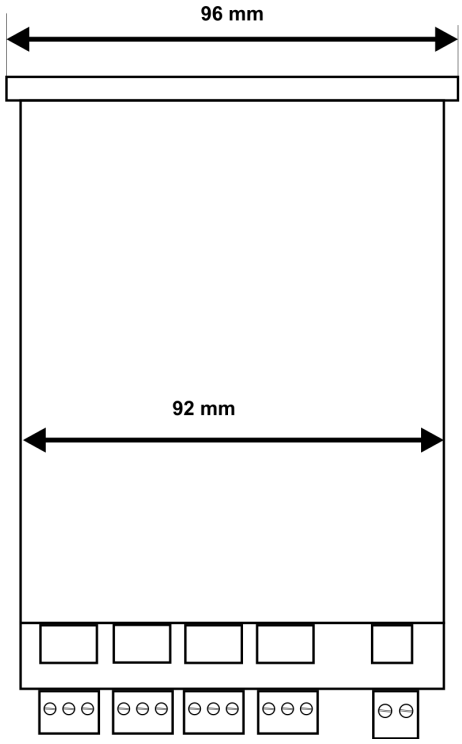

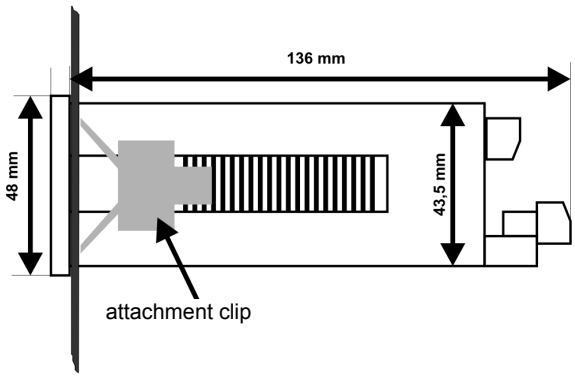

Applications