Limit Switch

Supply-limit-switch

AD-SMK 330 GS

Description

The supply-limit-switch AD-SMK 330 GS serves the switching of limiting values on transmitter signals. The device has an 0..20 mA, 4..20 mA input and an 0..10 V input and a current-limited transmitter feed. With this, 2-wire and 3-wire transmitter can be supplied and measured. With its two potential-free change-over contacts, the AD-SMK 330 GS can switch maximal two independent limiting values. The switching thresholds can be set at the front with the aid of the integral key coding switch in percent steps. The status of the relevant relay is indicated via an LED at the front. The AD-SMK 330 GS has two different operating modes, which can be selected via the function keys. Either two independent limiting values can be switched, whereby here one key coding switch per relay is effective. The switching hysteresis is in this case 1 percent. In operating mode hysteresis, both relays are synchronous. Here, the upper and lower switching point (switch-on point and switch-off point) can be selected separately with the two key coding switches. The relays can work in the operating current principle or the closed-circuit current principle in both operating modes. This can also be selected at the function keys. The efficient wide range power pack allows the supply with all established supply networks or voltage levels. Input, output and supply voltage are separated from each other galvanically with high isolation.

Application

Switching of limiting values on active standard signals, which correspond to, for instance, flows, height levels or temperatures.



Specific characteristics

- analog inputs for current and voltage
- current limited transmitter supply
- two potential-free changeover
- simple point setting using coded key
- wide range power supply

Business data

Order number

AD-SMK 330 GS

Information

Downloads

Tender text	smk330gs.zip
Safety instructions	ad-safety-instructions.pdf

Technical specifications

Current inputs	
Measuring range	4 ... 20 mA
Input resistance	50 Ohm
Input voltage	
Measuring range	0 ... 10 V
Input resistance	400 kOhm
Transmitter supply	
Voltage open circuit/full load	less then 21 V / higher 18 V
Current limit	ca. 30 mA
Relay outputs A/B	
Contact type	potential free changeover
Max. AC-breaking capacity	250 V AC, 2 A AC, 50Hz
Max. DC-breaking capacity	50 V DC, 2 A DC
Switching operations	
Mechanical	10^7
AC: 230V / 2A, cos(phi)=1	$6 * 10^5$
AC: 230V / 2A, cos(phi)=0,4	$2 * 10^5$
DC: 24V / 1A	$2 * 10^5$
Transmission behaviour	
Basic accuracy	1 % (1 Digit)
Temperature influence	+/- 100 ppm/K of full scale
Response time	100 ms
Supply	
Voltage range AC	50 ... 253 V AC, 50/60 Hz
Nominal voltage AC	230 V AC
Voltage range DC	20 ... 253 V DC
Nominal voltage DC	24 V DC
Power consumption AC / DC	2,4 VA / 1,8 W
Housing	
Manner of fastening	DIN rail 35mm (EN 50022)
Type of protection	IP 20
Connector cross section	max. 2,5 mm²
Weight	~ 200 g
Environmental conditions	
Ambient temperature	-10 ... 50 °C
Storage and transport	-10 ... 60 °C (no condensation)
EMC	
Product family standard [1)]	EN 61326-1
Emitted interference	EN 55011, CISPR11 Cl. B, Gr. 1

[1)] During electromagnetic disturbance minor changes in output signal are possible.

Electrical safety requirements	
Product family standard	EN 61010-1
Overvoltage category	II
Pollution degree	2

SALES & ADVICE

GRUBATEC MESS- UND REGELTECHNIK

MANUFACTURER

ADAMCZEWSKI Elektronische Messtechnik

Grubatec AG · Wölferstrasse 5 · CH-4414 Füllinsdorf

+41 55 617 00 80 · info@grubatec.ch · www.grubatec.ch

Subject to technical changes and printing errors.

Supply-limit-switch

AD-SMK 330 GS

Galvanic isolation, test voltages

Input/relays	4 kV (1 min)
Input/power-supply	3 kV (1 min)
Relays/power supply	4 kV (1 min)
Relays with each other	3 kV (1 min)

Protective systems

Input	overvoltage
Power supply	over voltage, over current and over temperature

Block and wiring diagram

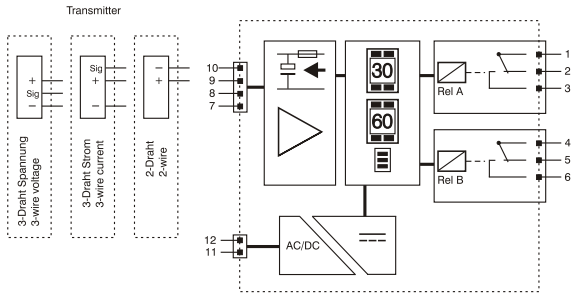

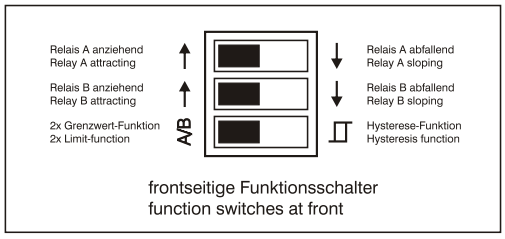

Dimensions

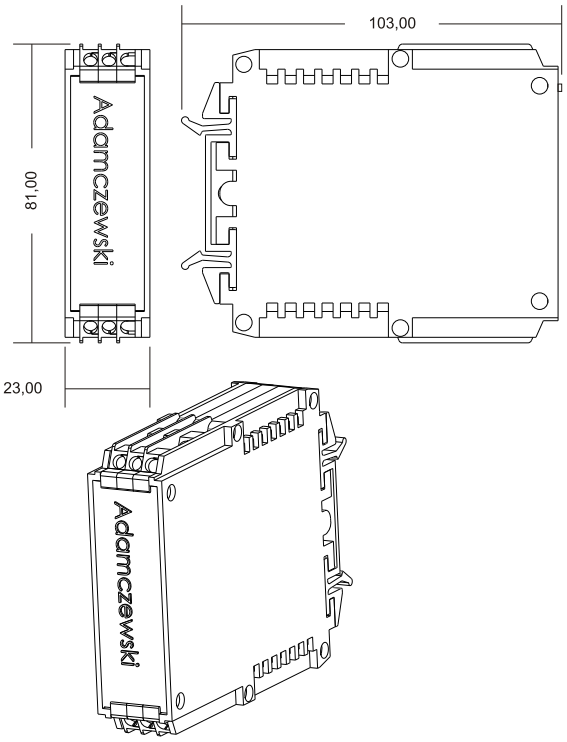

Circuit examples

