Supply Isolation Amplifier

AD-STV 300 GS

Description

The universal supply isolating amplifier AD-STV 300 GS converts the two active standard industrial signals 0...20 mA and 4...20 mA, amplifies them and separates them galvanically. In addition, the device still has a current-limited supply voltage for the supply of two-wire transmitters. The signals are also available at the output. All combinations are possible. A switchover is not necessary. The signal combination from input to output is selected via the terminals.

Application

Amplification and adaptation of standard active signals and transmitter signals with easy conversion to a freely selectable output signal.



Specific characteristics

- Three signals freely selectable at the input and output
- current limited supply voltage of transmitters
- Galvanic isolation and amplification
- No mechanical switches necessary
- Input / output combination by clamping the desired signals
- No subsequent adjustment necessary
- Suppression of live zero signal (4mA)
- Price / performance ratio allows for warehousing

Business data

Order number

AD-STV 300 GS

Information

Downloads

Safety instructions — ad-safety-instructions.pdf

Technical specifications

Current inputs	
Measuring range 1	0 ... 20 mA
Measuring range 2	4 ... 20 mA
Input resistance 1/2	50 Ohm
Transmitter supply	
Open-circuit voltage	20 V
Voltage at 20 mA	14 V
Current limit	ca. 30 mA
Current outputs	
Output range 1	0 ... 20 mA
Output range 2	4 ... 20 mA
Maximum burden 1/2	500 Ohm
Simultaneous use	Nein
Output voltage	
Output range	0 ... 10 V
Min. burden	1000 Ohm
Supply	
Voltage range	50 ... 253 V AC (50 Hz), 20 ... 253 V DC
Nominal voltage	230 V AC (50 Hz), 24 V DC
Power consumption	4 VA, 2 W
Transmission behaviour	
Basic accuracy	< 0,2 %
Temperature influence	100 ppm/K
Response time	~ 50 ms (10...90 % output signal)
Housing	
Dimensions (WxHxD)	18x78x103 mm
Type of protection	IP 20
Connection method	screw clamp
Terminals, wire cross section	2,5 mm² flex wire / 4 mm² one wire
Bolting torque terminals	0,5 Nm
Weight	~ 140 g
Manner of fastening	35 mm DIN rail 35mm
Environmental conditions	
Ambient temperature	-10 ... 50 °C
Storage and transport	-10 ... 70 °C (no condensation)
EMC	
Product family standard	EN 61326-1 [1]
Emitted interference	EN 55011, CISPR11 Cl. B, Gr. 1
Electrical safety requirements	
Product family standard	EN 61010-1
Overvoltage category	II
Pollution degree	2
Galvanic isolation, test voltages	
Input to output	3,75 kV, 50 Hz (1 min.)
Input, output to supply	3 kV, 50 Hz (1 min.)

[1] During checking, slight signal deviations are possible.

SALES & ADVICE
GRUBATEC MESS- UND REGELTECHNIK

MANUFACTURER
ADAMCZEWSKI Elektronische Messtechnik

Grubatec AG · Wölferstrasse 5 · CH-4414 Füllinsdorf
+41 55 617 00 80 · info@grubatec.ch · www.grubatec.ch

Subject to technical changes and printing errors.

Supply Isolation Amplifier

AD-STV 300 GS

Block and wiring diagram

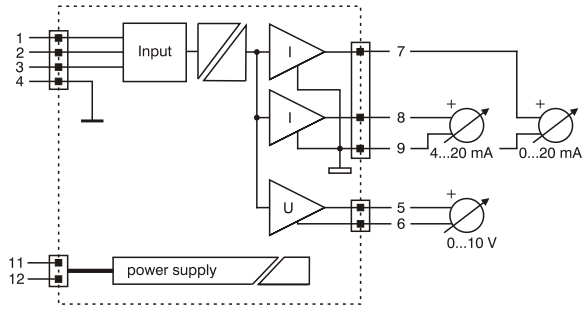

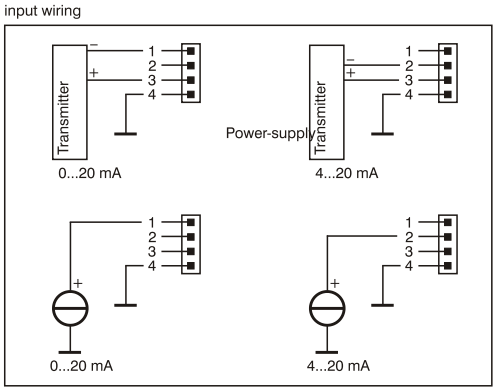

Dimensions

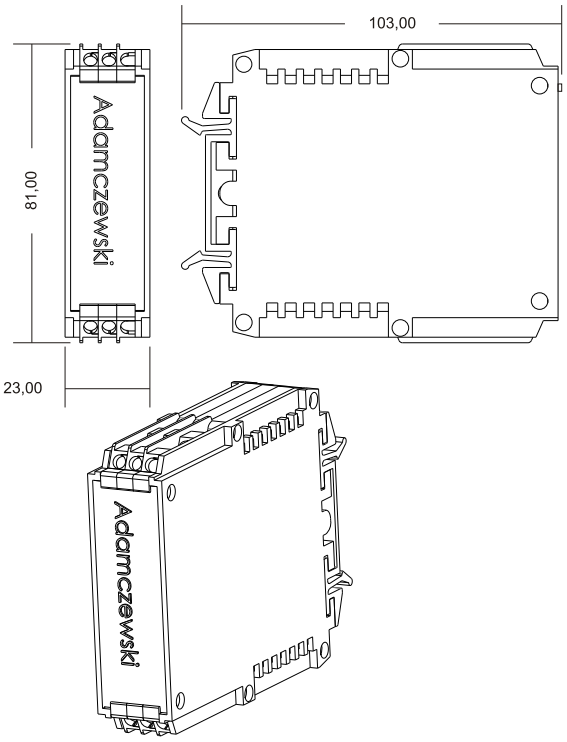

Subject to technical changes and printing errors.