Special Functions

Setpoint Encoder

AD-SWG 211 GS

Description

With the setpoint encoder AD-SWG 211 GS setpoints in the form of analog signals can be set by adjustable Coding switch. The range is 0 ... 99 % of the final value and is set on the front in steps of 1%. The output is galvanically isolated from the supply voltage and up to the maximum resistance independent of the connected load. It can be selected between current or voltage output. Due to the highly efficient integrated wide range power supply high output loads are achieved with low power consumption.

Application

For presetting analog set values in measurement and control systems, for simulating analog measurement signals, etc.



Specific characteristics

- frontal coding switch for setpoint
- Current or voltage output
- Wide range power supply

Business data

Order number

ADSWG211GS23	setpoint range 0 ... 20 mA
ADSWG211GS43	setpoint range 4 ... 20 mA
ADSWG211GS13	setpoint range 0 ... 10 V
AD-SWG 211 GS	

Information

Downloads

Safety instructions	ad-safety-instructions.pdf

Technical specifications

Coding switch	
Setting range	0 ... 99 % (1%- steps)
Output current	
Output range	0 ... 20 mA, 4 ... 20 mA[1]
Max. burden	500 Ohm
Residual ripple	20 µAss
Output voltage	
Output range	0 ... 10 V, 2 ... 10 V [1]
Min. burden	500 Ohm
Residual ripple	50 mVss
Supply	
Voltage range AC	50 ... 253 V AC, 50/60 Hz
Nominal voltage AC	230 V AC
Voltage range DC	20 ... 253 V DC
Nominal voltage DC	24 V DC
Power consumption AC / DC	2 VA / 1 W
Transmission behaviour	
Accuracy	< 0,2 %
Temperature influence	50 ppm/K
Response time	~ 200 ms
Housing	
Dimensions (WxHxD)	23x78x103 mm
Type of protection	IP 20
Connection method	screw clamp
Terminals, wire cross section	2,5 mm² flex wire / 4 mm² one wire
Bolting torque terminals	0,5 Nm
Weight	~ 100 g
Manner of fastening	35 mm DIN rail 35mm
Environmental conditions	
Ambient temperature	-10 ... 50 °C
Storage and transport	-10 ... 70 °C (no condensation)
EMC	
Product family standard	EN 61326-1 [2]
Emitted interference	EN 55011, CISPR11 Cl. B, Gr. 1
Electrical safety requirements	
Product family standard	EN 61010-1
Overvoltage category	II
Pollution degree	2
Galvanic isolation, test voltages	
Signal / supply unit	4 kV (1 min.)
Protection circuits	
Input	electrical surge protection
Output	electrical surge protection
Power supply	electrical surge and reverse current protection

[1] Specify signal range in plain text when ordering.

[2] During electromagnetic disturbance minor changes in output signal are possible.

SALES & ADVICE
GRUBATEC
MESS- UND REGELTECHNIK

MANUFACTURER
ADAMCZEWSKI
Elektronische Messtechnik

Grubatec AG · Wölferstrasse 5 · CH-4414 Füllinsdorf
+41 55 617 00 80 · info@grubatec.ch · www.grubatec.ch

Subject to technical changes and printing errors.

Setpoint Encoder

AD-SWG 211 GS

Block and wiring diagram

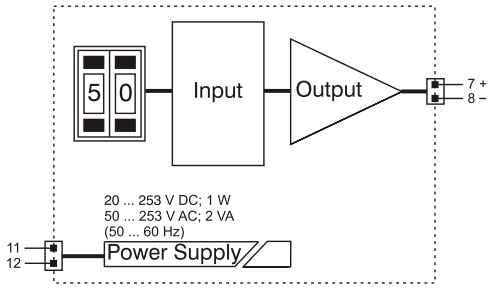

Dimensions

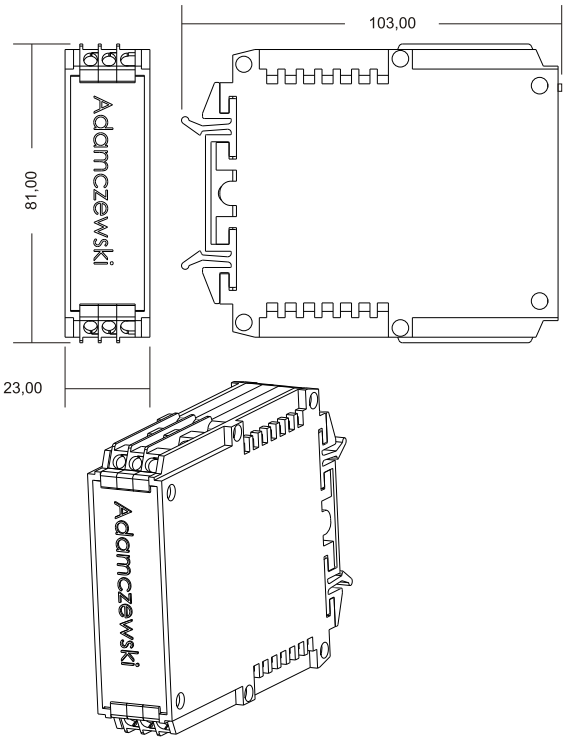

SALES & ADVICE
GRUBATEC
MESS- UND REGELTECHNIK

MANUFACTURER
ADAMCZEWSKI
Elektronische Messtechnik

Grubatec AG · Wölferstrasse 5 · CH-4414 Füllinsdorf
+41 55 617 00 80 · info@grubatec.ch · www.grubatec.ch

Subject to technical changes and printing errors.