AC Isolation Amplifier

AD-SWK 3 WG

Description

With the current converter AD-SWK 3 WG up to three independent alternating current magnitudes can be converted to three alternating voltage of ±0-10 V. The frequency-response curve at the output is equivalent to input. Inputs, outputs and supply voltage are galvanically separated from each other with high insulation. The outputs refer to a common mass. An integral electronic wide range power pack with high efficiency prevents strong increase in heat.

Application

For conversion of up to three alternating currents to three alternating voltage

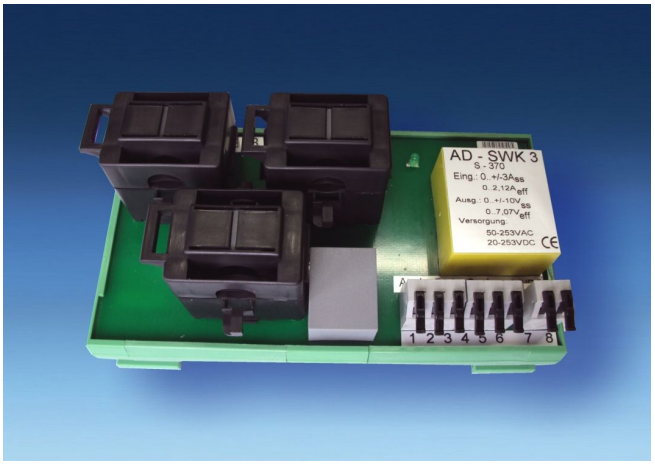

Business data

Order number

AD-SWK 3 WG

Information

Downloads

Safety instructions	ad-safety-instructions.pdf

Technical specifications

Input	
Measuring range	0 ... 3 A ACs (0 ... 2,12 A ACeff)
Maximum measuring range	0 ... 10 A ACs (0 ... 7,07 A ACeff)
Max. measurable harmonic	80 (4 kHz)
Ct size (inside diameter)	<8 mm
Permanent overload	120 % of the rated value
Temporary overload (1s)	rated value x 20
Output	
Output range	0 ... 10 V ACs (0 ... 7,07 V ACeff)
Min. burden	10 kOhm
Accuracy	
Unit	<0,5 %
Temperature influence	<100 ppm / K
Phase backfill Input/Output	output 3,6° lagging
Supply	
Supply voltage AC	50 ... 253 V AC
Nominal voltage AC	230 V AC
Supply voltage DC	20 ... 253 V DC
Nominal voltage DC	24 V DC
Power consumption AC / DC	1,8 VA / 0,8 W
Housing	
Connection method	spring force terminal
Connection method input	split core current transformer
Manner of fastening	35 mm DIN rail 35mm
Dimensions (WxHxD)	138x80x64(88)mm
Weight	~ 280 g
Environmental conditions	
Ambient temperature	-10 ... 50 °C
Storage and transport	-10 ... 70 °C (no condensation)
EMC	
Product family standard	EN 61326-1
Emitted interference	EN 55011, CISPR11 Cl. B, Gr. 1
During checking, slight signal deviations are possible	
Electrical safety requirements	
Product family standard	EN 61010-1
Overvoltage category	II
Pollution degree	2
Galvanic isolation, test voltages	
Input/output	2,2 kV AC + over voltage cable
Signal/auxiliary voltage	3 kV RMS
Protective systems	
Input/output	over voltage and over current
Power supply	over voltage, over current and over temperature

SALES & ADVICE

GRUBATEC MESS- UND REGELTECHNIK

MANUFACTURER

ADAMCZEWSKI Elektronische Messtechnik

Grubatec AG · Wölferstrasse 5 · CH-4414 Füllinsdorf

+41 55 617 00 80 · info@grubatec.ch · www.grubatec.ch

Subject to technical changes and printing errors.

AC Isolation Amplifier

AD-SWK 3 WG

Block and wiring diagram

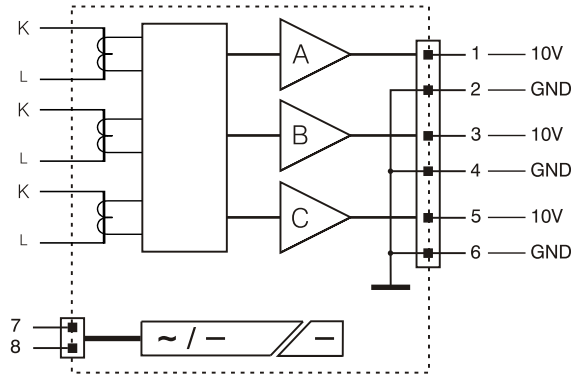

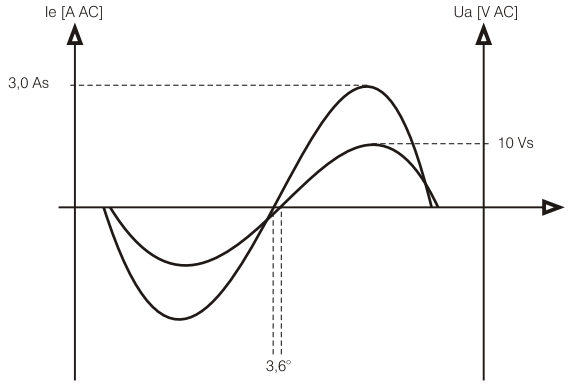

Dimensions

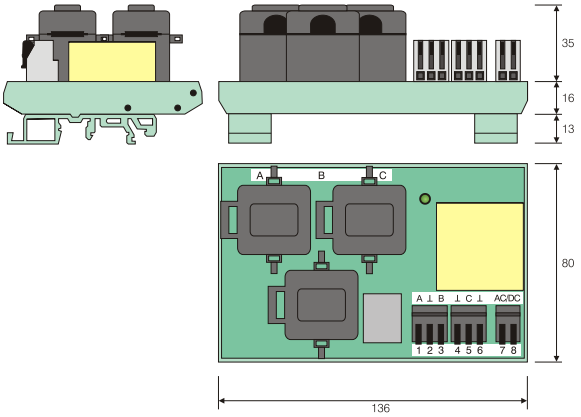

Subject to technical changes and printing errors.