# AC Isolation Amplifier

AD-SWK 6 WG

## Description

With the current converter AD-SWK 6 WG up to three independent alternating current magnitudes can be converted to three alternating voltages of 0-10 V. The frequency-response curve at the output is equivalent to input. There are 3 switchable input ranges available. Inputs, outputs and supply voltage are galvanically separated from each other. The outputs refer to a common mass. An integral electronic wide range power pack with high efficiency prevents strong increase in heat.

## Application

For conversion of up to three alternating currents to three alternating voltages




## Business data

**Order number**

AD-SWK 6 WG

## Information

**Downloads**

| | |
|---|---|
| Safety instructions | ad-safety-instructions.pdf |

## Technical specifications

**Input**

| | |
|---|---|
| Measuring range | 0 ...1,5 / 2 / 3 A ACs- switchable |
| Max. measurable harmonic | 80 (4 kHz) |
| Ct size (inside diameter) | <8 mm |
| Permanent overload | 120 % of the rated value |
| Temporary overload (1s) | rated value x 20 |

**Output**

| | |
|---|---|
| Output range | 0 ... 10 V ACs (7,07 V ACeff) |
| Min. burden | 10 kOhm |

**Accuracy**

| | |
|---|---|
| Unit | <0,5 % |
| Temperature influence | <100 ppm / K |
| Phase backfill Input/Output | output 3,6° lagging |

**Supply**

| | |
|---|---|
| Supply voltage AC | 50 ... 253 V AC |
| Nominal voltage AC | 230 V AC |
| Supply voltage DC | 20 ... 253 V DC |
| Nominal voltage DC | 24 V DC |
| Power consumption AC / DC | 1,8 VA / 0,8 W |

**Housing**

| | |
|---|---|
| Connection method input | split core current transformer |
| Connection method | spring force terminal |
| Manner of fastening | 35 mm DIN rail 35mm |
| Dimensions (WxHxD) | 138x80x64(88)mm |
| Weight | ~ 280 g |

**Environmental conditions**

| | |
|---|---|
| Ambient temperature | -10 ... 50 °C |
| Storage and transport | -10 ... 70 °C (no condensation) |

**EMC**

| | |
|---|---|
| Product family standard | EN 61326-1 |
| Emitted interference | EN 55011, CISPR11 Cl. B, Gr. 1 |

During checking, slight signal deviations are possible

**Electrical safety requirements**

| | |
|---|---|
| Product family standard | EN 61010-1 |
| Overvoltage category | II |
| Pollution degree | 2 |
| Safety measurement | EN 61010-2-030 |
| Measurement category | CAT III |

**Galvanic isolation, test voltages**

| | |
|---|---|
| Input/output | 2,2 kV AC + Test voltage of the cable of minimum 1000 V |
| Signal/auxiliary voltage | 3 kV RMS |
| Working voltage | 300 V AC/DC |

**Protective systems**

| | |
|---|---|
| Input/output | over voltage and over current |
| Power supply | over voltage, over current and over temperature |


SALES & ADVICE

GRUBATEC MESS- UND REGELTECHNIK

MANUFACTURER

ADAMCZEWSKI Elektronische Messtechnik

Grubatec AG · Wölferstrasse 5 · CH-4414 Füllinsdorf

+41 55 617 00 80 · info@grubatec.ch · www.grubatec.ch





Subject to technical changes and printing errors.

# AC Isolation Amplifier

AD-SWK 6 WG

## Display and operating elements

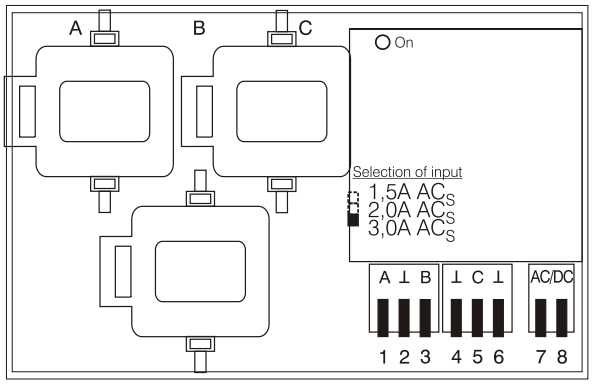


**On**: LED for operating display in green
**Selection of input**: Switch for the input ranges

## Block and wiring diagram

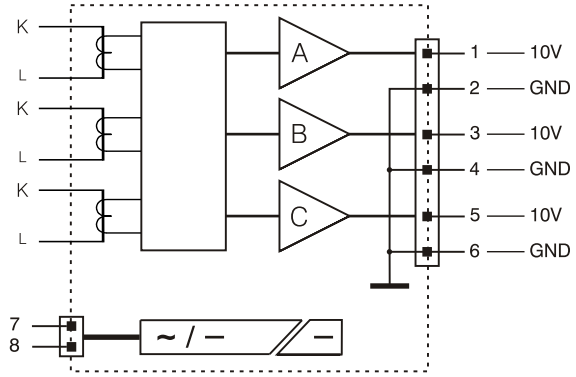


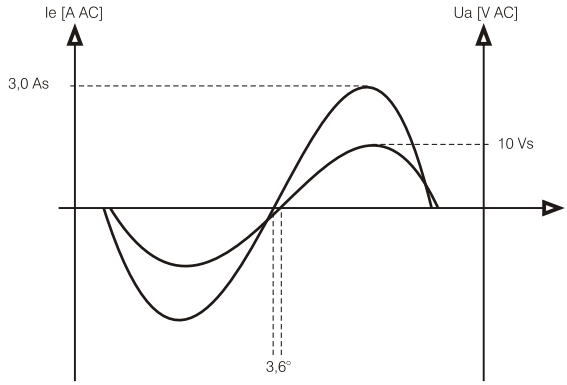


## Dimensions

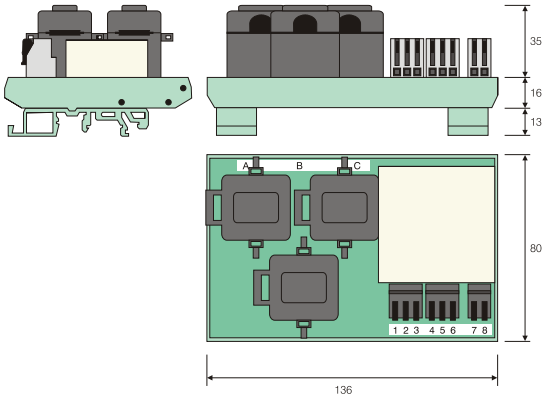



Subject to technical changes and printing errors.