Isolation Amplifier

Multiplier Isolation Amplifier

AD-TV 12 GX

Description

The multiplier separation amplifier AD-TV 12 GX in the narrow 6.2 mm housing serves the galvanic separation, amplification and conversion or adaption of analogue measuring signals and, at the same time, the multiplication of the input signal. The compact housing contains two synchronous output channels. All output channels are galvanic separated from each other, from the input and from the supply voltage. The type of signal can be freely selected at the input and the signal is multiplied onto the two current outputs. The standard signal combinations can be selected via the DIP switches at the side of the unit. Additionally, the separation amplifier has a highly efficient electronic power pack, which admits high loads at the two current outputs and causes low heat development. The unit can also be supplied via a hat rail connector, available as option; therefore several units in the GX series can sit side by side on the hat rail and the supply voltage must only be laid on once.

Application

Galvanic separation or conversion of analogue standard signals with simultaneous multiplication.



Specific characteristics

- narrow 6.2mm type of construction
- two galvanic separated, synchronous current outputs
- current and voltage input (switchable)
- easy configuration through DIP switch at the side of the unit
- supply via hat rail connector

Business data

Order number

AD-TV 12 GX

Accessory

DIN-rail connector	AD-GX Connector

Information

Downloads

Tender text	tv12gx.zip
Safety instructions	ad-safety-instructions.pdf

Technical specifications

Input

Range current input	0 ... 20 mA; 4 ... 20 mA
Range voltage input	0 ... 10 V
Input resistance current	50 Ohm
Input resistance voltage	100 kOhm

Output

2 current outputs	0 ... 20 mA; 4 ... 20 mA
Max. load	400 Ohm per channel
Max. residual ripple	50 mVss
Signal clamping	20 mA

Supply

Voltage range	18 ... 30 V DC
Nominal voltage	24 V DC
Power consumption	< 1,5 W

Accuracy

Accuracy	< 0,2 % of full scale
Linearity error	< 0,2 % of full scale
Temperature influence	70 ppm/K of full scale
Response time	~ 10 ms

Housing

Dimensions (WxHxD)	6,2 x 92 x 101 mm³
Type of protection	IP 20
Connection method	screw clamp (2,5 mm² flex wire / 4 mm² one wire)
Bolting torque terminals	0,5 Nm
Weight	~ 70 g
Manner of fastening	35 mm DIN rail

Environmental conditions

Ambient temperature	-10 ... 50 °C
Storage and transport	-10 ... +70 °C (no condensation)

EMC

Product family standard [1]	EN 61326-1
Emission [2]	EN 55011, CISPR11 Cl. A, Gr. 1

[1] During checking, slight signal deviations are possible.

[2] Warning:
This device is not intended to be used in residential areas and can not ensure adequate protection of radio reception in such environments.

Electrical safety requirements

Product family standard	EN 61010-1
Overvoltage category	II
Pollution degree	2

Galvanic isolation, test voltages

Input / output	1,5 kV (1 min.)
Signal / supply unit	1,5 kV (1 min.)

SALES & ADVICE

GRUBATEC
MESS- UND REGELTECHNIK

MANUFACTURER

ADAMCZEWSKI
Elektronische Messtechnik

Grubatec AG · Wölferstrasse 5 · CH-4414 Füllinsdorf
+41 55 617 00 80 · info@grubatec.ch · www.grubatec.ch

Subject to technical changes and printing errors.

Multiplier Isolation Amplifier

AD-TV 12 GX

Technical specifications

Protection circuits

Input	electrical surge protection
Output	electrical surge protection
Power supply	electrical surge and reverse current protection

Display and operating elements

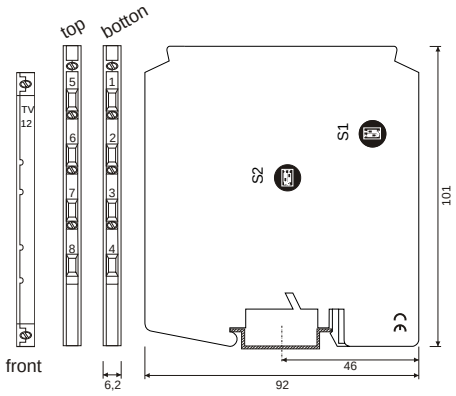

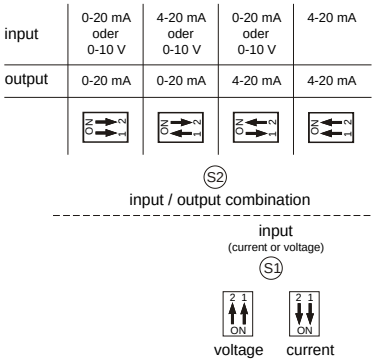

Block and wiring diagram

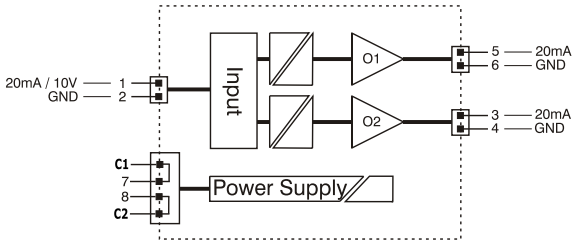

Dimensions

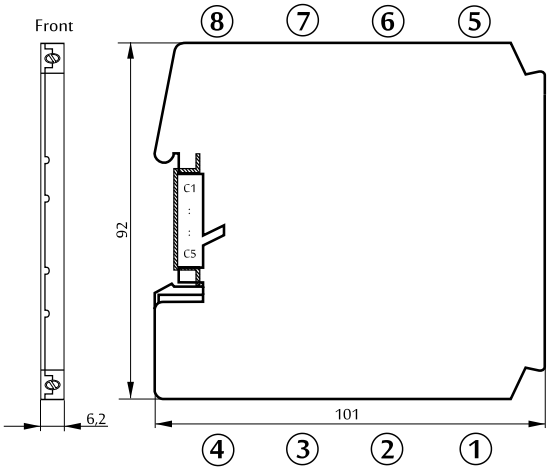

SALES & ADVICE
GRUBATEC
MESS- UND REGELTECHNIK

MANUFACTURER
ADAMCZEWSKI
Elektronische Messtechnik

Grubatec AG · Wölferstrasse 5 · CH-4414 Füllinsdorf
+41 55 617 00 80 · info@grubatec.ch · www.grubatec.ch

Subject to technical changes and printing errors.