Isolation Amplifier

AD-TV 200 EV

Description

The separation amplifier AD-TV 200 EV serves the galvanic separation of amplification, conversion or adjustment of analogue measuring signals. The slide-in card can contain up to 4 completely independent channels. With all channels input, output and supply voltage are galvanically separated. The channels are also completely insulated amongst each other. At each channel, input signal type and output signal type can be freely selected. A spindle trimmer is located at the front for direct adjustment. Due to the narrow construction (4 TE) up to 84 channels can be integrated in one standard module carrier.

Application

Galvanic separation, adjustment, amplification and conversion of analogue measuring signals in up to 4 independent channels.



Business data

Order number

ADTV201EV1	1 ch (nominal voltage 230 V AC)
ADTV201EV5	1 ch (nominal voltage 24 V DC)
ADTV202EV1	2 ch (nominal voltage 230 V AC)
ADTV202EV5	2 ch (nominal voltage 24 V DC)
ADTV203EV1	3 ch (nominal voltage 230 V AC)
ADTV203EV5	3 ch (nominal voltage 24 V DC)
ADTV204EV1	4 ch (nominal voltage 230 V AC)
ADTV204EV5	4 ch (nominal voltage 24 V DC)

Information

Downloads

Safety instructions — ad-safety-instructions.pdf

Technical specifications

Input

Measuring range current	0 ...20 mA; 4 ... 20 mA[1)]
Input resistances	50 Ohm
Measuring range voltage	0 ... 10 V, 2 ... 10 V[1)]
Input resistances	100 kOhm

Output

Output range current	0 ... 20 mA; 4 ... 20 mA[1)]
Max. burden	500 Ohm
Output range voltage	0 ... 10 V; 2 ... 10 V[1)]
Min. burden	500 Ohm
Residual ripple	< 50 mVss

[1)] switchable and adjustable per channel; others on request

Transmission behaviour

Basic accuracy	< 0,3 %
Temperature influence	< 100 ppm/K

Supply

Supply voltage	20 ... 253 V DC / 50 ... 253 V AC
Nominal voltage	24 V DC / 230 V AC
Power consumption	5,4 W / 11 VA

Type of construction

Manner of fastening	19"-Europakarte 4TE
Type of protection	IP 00
Weight	~ 160 g

Environmental conditions

Ambient temperature	-10 ... 50 °C
Storage and transport	-10 ... 70 °C (no condensation)

EMC

Product family standard	EN 61326-1 [2)]
Emitted interference	EN 55011, CISPR11 Cl. B, Gr. 1

[2)] During electromagnetic disturbance minor changes in output signal are possible.

Electrical safety requirements

Product family standard	EN 61010-1
Overvoltage category	II
Pollution degree	2

Galvanic isolation, test voltages

Input/output	0,5 kV RMS (1 min.)
Channel/channel	0,5 kV RMS (1 Min.)
Signal/auxiliary voltage	3 kV RMS (1 min.)

Protective systems

Input/output	electrical surge protection
Power supply	electrical surge and reverse current protection

Subject to technical changes and printing errors.

Isolation Amplifier

AD-TV 200 EV

Block and wiring diagram

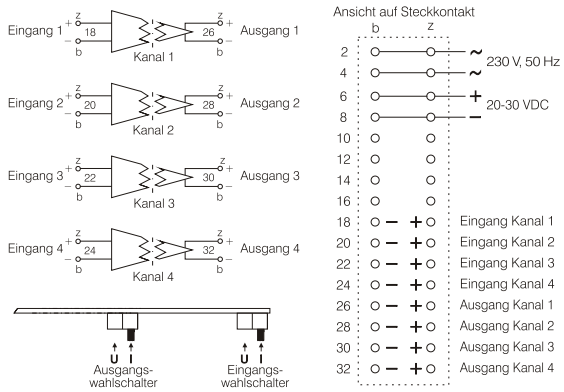

Dimensions

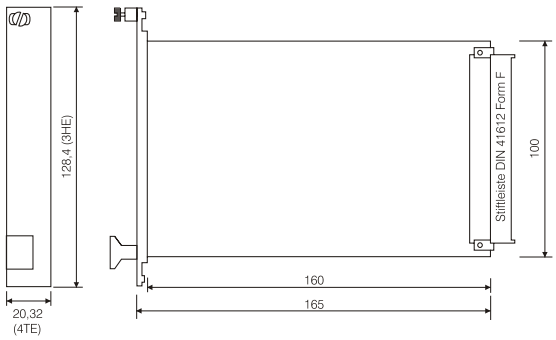

Subject to technical changes and printing errors.