Isolation Amplifier

AD-TV 200 ST

Description

The isolation amplifier AD-TV 200 ST is used for galvanic isolation, amplification and conversion or adaptation of analog measurement signals. Two front-side spindle trimmers can be used to additional adjust the offset (zero) and full scale (span). The device type consists of a terminal block and a plug-in isolating amplifier. The user-friendly and easy-to-install plug-in module technology (type ST) enables fast and trouble-free commissioning or exchange device processing.

Application

Galvanic isolation, adapt, amplify and transform analog measurement signals.



Business data

Order number

AD-TV 200 ST

Information

Downloads

Tender text	tv200st.zip
Safety instructions	ad-safety-instructions.pdf

Technical specifications

Input

Measuring range current	0 ...20 mA; 4 ... 20 mA[1)]
Input resistance	50 Ohm
Measuring range voltage	0 ... 10 V, 2 ... 10 V[1)]
Input resistance	100 kOhm

Output

Output range current	0 ... 20 mA; 4 ... 20 mA[1)]
Max. burden	500 Ohm
Output range voltage	0 ... 10 V; 2 ... 10 V[1)]
Min. burden	500 Ohm
Residual ripple	< 50 mVss

[1)] adjustable; others on request

Housing ST

Dimensions (WxHxD)	21 x 42 x 102 mm
Type of protection	IP 20
Connection method	screw clamp
Terminals, wire cross section	2,5 mm² flex wire / 4 mm² one wire
Bolting torque terminals	0,5 Nm
Weight	~ 80 g
Manner of fastening	35 mm DIN rail 35mm

Transmission behaviour

Basic accuracy	< 0,3 % of full scale
Temperature influence	< 100 ppm/K of full scale

Supply

Supply voltage	20 ... 30 V DC
Nominal voltage	24 V DC
Power consumption	1 W

Environmental conditions

Ambient temperature	-10 ... 50 °C
Storage and transport	-10 ... 70 °C (no condensation)

EMC

Product family standard	EN 61326-1 [2)]
Emitted interference	EN 55011, CISPR11 Cl. B, Gr. 1

[2)] During electromagnetic disturbance minor changes in output signal are possible.

Electrical safety requirements

Product family standard	EN 61010-1
Overvoltage category	II
Pollution degree	2

Galvanic isolation, test voltages

Input/output	0,5 kV RMS (1 min.)
Signal/auxiliary voltage	1 kV RMS (1 min.)

Protective systems

Input/output	electrical surge protection
Power supply	electrical surge and reverse current protection

SALES & ADVICE

GRUBATEC MESS- UND REGELTECHNIK

MANUFACTURER

ADAMCZEWSKI Elektronische Messtechnik

Grubatec AG · Wölferstrasse 5 · CH-4414 Füllinsdorf

+41 55 617 00 80 · info@grubatec.ch · www.grubatec.ch

Subject to technical changes and printing errors.

Isolation Amplifier

AD-TV 200 ST

Display and operating elements

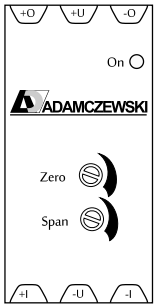

Designation	LED	Meaning
On	green	Power supply
Zero		adjust zero
Span		adjust span

Block and wiring diagram

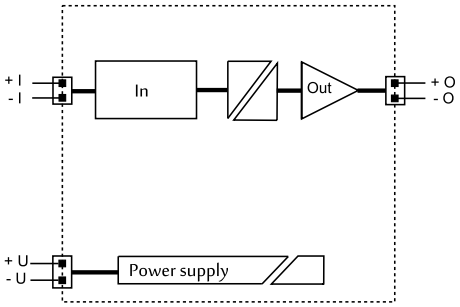

Dimensions

