Isolation Amplifier

AD-TV 22 GL

Description

The separation amplifier AD-TV 22 GL serves the galvanic separation and amplification of DC-current signals (0/4-20 mA). The output signal follows linear the input dimension and is independent of the connected burden up to a limiting value. Input, output and supply voltage are galvanically separate from each other with high insulation. An integral electronic power pack with a high degree of effectiveness prevents strong heating and allows high output loads. A high packing density is achieved in combination with a narrow type of construction.

Application

Burden amplification and galvanic decoupling of active DC-current signals in a cost-effective build-up.



Specific characteristics

- Supply buffer amplifier for 3-way separation of 0/4-20 mA signals (output follows input 1:1)
- 18 mm narrow housing

Business data

Order number

AD-TV 22 GL

Information

Downloads

Tender text	tv22gl.zip
Safety instructions	ad-safety-instructions.pdf

Technical specifications

Input current

Measuring range	0 ... 20 mA; 4 ... 20 mA
Input resistance	50 Ohm

Output current

Output range	0 ... 20 mA; 4 ... 20 mA 1:1 to the input signal
Max. burden	400 Ohm
Residual ripple	<25 µAss

Transmission behaviour

Basic accuracy	< 0,2 %
Temperature influence	< 100 ppm/K

Supply

Supply voltage	20 ... 253 V DC / 50 ... 253 V AC
Nominal voltage	24 V DC / 230 V AC
Power consumption	0,9 W / 2 VA

Housing

Dimensions (WxHxD)	18x81x103mm
Type of protection	IP 20
Connection method	screw clamp
Terminals, wire cross section	2,5 mm² flex wire / 4 mm² one wire
Bolting torque terminals	0,5 Nm
Manner of fastening	DIN rail 35mm (EN 50022)
Weight	~ 100 g

Environmental conditions

Ambient temperature	-10 ... 70 °C
Storage and transport	-20 ... 70 °C (no condensation)

EMC

Product family standard	EN 61326-1 [1)]
Emitted interference	EN 55011, CISPR11 Cl. B, Gr. 1

[1)] During electromagnetic disturbance minor changes in output signal are possible.

Electrical safety requirements

Product family standard	EN 61010-1
Overvoltage category	II
Pollution degree	2

Functional safety

Safety integrity level	SIL 2 (IEC 61508)

Galvanic isolation, test voltages

Input/output	3,75 kV RMS (1 min.)
Signal/auxiliary voltage	3 kV RMS (1 min.)

Protective systems

Input/output	electrical surge protection
Power supply	electrical surge and reverse current protection

SALES & ADVICE

GRUBATEC MESS- UND REGELTECHNIK

MANUFACTURER

ADAMCZEWSKI Elektronische Messtechnik

Grubatec AG · Wölferstrasse 5 · CH-4414 Füllinsdorf

+41 55 617 00 80 · info@grubatec.ch · www.grubatec.ch

Subject to technical changes and printing errors.

Isolation Amplifier

AD-TV 22 GL

Block and wiring diagram

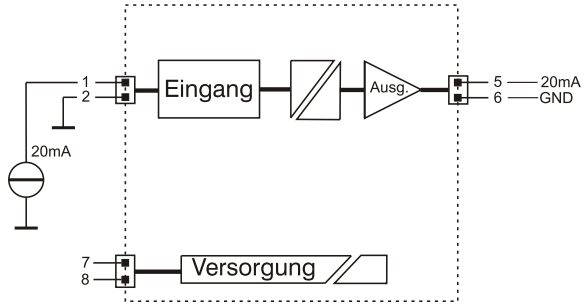

Dimensions

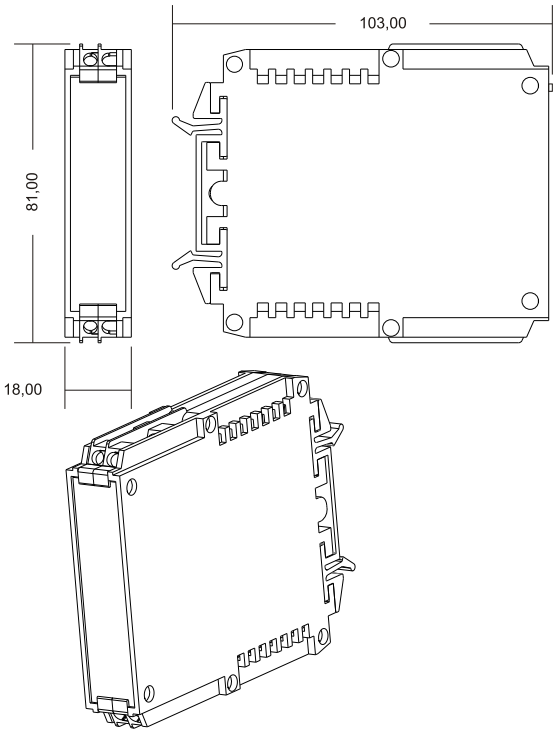

Grubatec AG · Wölferstrasse 5 · CH-4414 Füllinsdorf

+41 55 617 00 80 · info@grubatec.ch · www.grubatec.ch

Subject to technical changes and printing errors.