# Isolation Amplifier

AD-TV 24 GL

## Description

The separation amplifier AD-TV 24 GL serves the galvanic separation and amplification of DC-current signals (0/4-20 mA). The output signal follows linear the input dimension and is independent of the connected burden up to a limiting value. Input, output and supply voltage are galvanically separate from each other with high insulation. An integral electronic power pack with a high degree of effectiveness prevents strong heating and allows high output loads. A high packing density is achieved in combination with a narrow type of construction.

## Application

Burden amplification and galvanic decoupling of active DC-current signals in a cost-effective build-up.




## Specific characteristics

- Supply buffer amplifier for 3-way separation of 0/4-20 mA signals (output follows input 1:1)
- 18 mm narrow housing

## Business data

**Order number**

AD-TV 24 GL

## Information

**Downloads**

| | |
|---|---|
| Tender text | tv24gl.zip |
| Safety instructions | ad-safety-instructions.pdf |

## Technical specifications

**Input current**

| | |
|---|---|
| Measuring range | 0 ... 20 mA; 4 ... 20 mA |
| Input resistance | 50 Ohm |

**Output current**

| | |
|---|---|
| Output range | 0 ... 20 mA; 4 ... 20 mA<br>1:1 to the input signal |
| Max. burden | 400 Ohm |
| Residual ripple | <25 µAss |

**Transmission behaviour**

| | |
|---|---|
| Basic accuracy | < 0,2 % |
| Temperature influence | < 100 ppm/K |

**Supply**

| | |
|---|---|
| Supply voltage | 20 ... 30 V DC |
| Nominal voltage | 24 V DC |
| Power consumption | 0,9 W |

**Housing**

| | |
|---|---|
| Dimensions (WxHxD) | 18x81x103mm |
| Type of protection | IP 20 |
| Connection method | screw clamp |
| Terminals, wire cross section | 2,5 mm² flex wire / 4 mm² one wire |
| Bolting torque terminals | 0,5 Nm |
| Manner of fastening | DIN rail 35mm (EN 50022) |
| Weight | ~ 100 g |

**Environmental conditions**

| | |
|---|---|
| Ambient temperature | -10 ... 50 °C |
| Storage and transport | -10 ... 70 °C (no condensation) |

**EMC**

| | |
|---|---|
| Product family standard | EN 61326-1 [1)] |
| Emitted interference | EN 55011, CISPR11 Cl. B, Gr. 1 |

[1)] During electromagnetic disturbance minor changes in output signal are possible.

**Electrical safety requirements**

| | |
|---|---|
| Product family standard | EN 61010-1 |
| Overvoltage category | II |
| Pollution degree | 2 |

**Galvanic isolation, test voltages**

| | |
|---|---|
| Input/output | 3,75 kV RMS (1 min.) |
| Signal/auxiliary voltage | 3 kV RMS (1 min.) |

**Protective systems**

| | |
|---|---|
| Input/output | electrical surge protection |
| Power supply | electrical surge and reverse current protection |


SALES & ADVICE

GRUBATEC MESS- UND REGELTECHNIK

MANUFACTURER

ADAMCZEWSKI Elektronische Messtechnik

Grubatec AG · Wölferstrasse 5 · CH-4414 Füllinsdorf

+41 55 617 00 80 · info@grubatec.ch · www.grubatec.ch





Subject to technical changes and printing errors.

# Isolation Amplifier

AD-TV 24 GL

## Block and wiring diagram

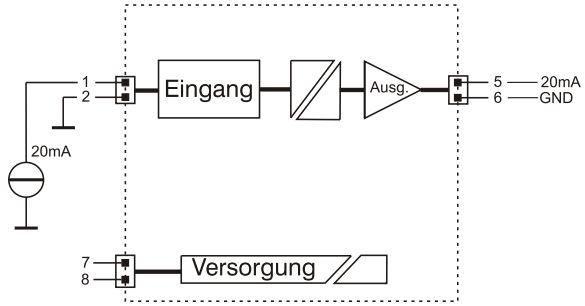


## Dimensions

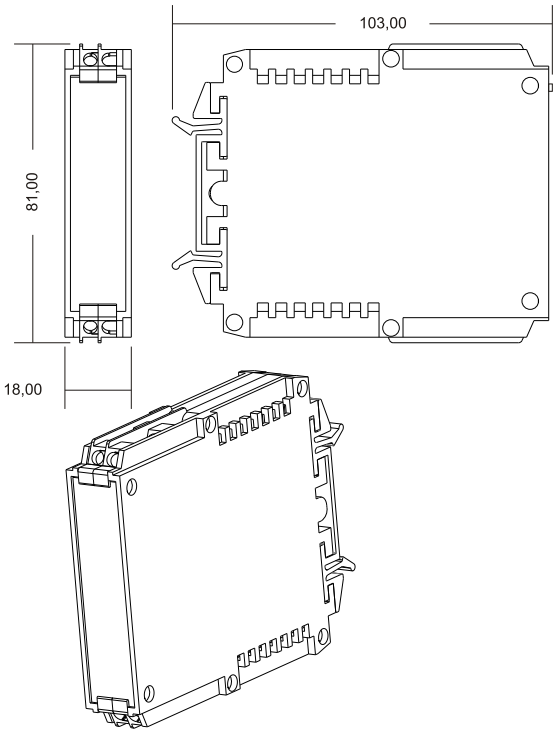





Grubatec AG · Wölferstrasse 5 · CH-4414 Füllinsdorf

+41 55 617 00 80 · info@grubatec.ch · www.grubatec.ch





Subject to technical changes and printing errors.