Isolation Amplifier

Vario-Isolation-Amplifier

AD-TV 30 GL

Description

The VARIO isolation amplifier AD-TV 30 GL serves to galvanically separate, convert and amplify DC current signals and voltage signals (0/4...20 mA and 0/2...10V DC). The signal sizes are adjustable at the front. The output signal follows the input size linear and is independent of the connected load up to a limiting value. Input, output and the supply voltage are galvanically separated from each other with a high degree of insulation. A highly efficient, integrated electronic wide-range power pack enables operation with 20...253 V DC or 50...253 V AC. There is no possibility of cross polarity of the connection voltage. A high packing density is achieved due to its narrow build.

Application

Conversion, load amplification and galvanic decoupling of impressed DC current signals and voltage signals.



Business data

Order number

AD-TV 30 GL

Information

Downloads

Tender text	tv30gl.zip
Safety instructions	ad-safety-instructions.pdf

Technical specifications

Input current	
Measuring range	0/4 ... 20 mA
Input resistance	85 Ohm
Input voltage	
Measuring range	0/2 ... 10 V
Input resistance	> 100 kOhm
Output current	
Output range	0/4 ... 20 mA
Max. burden	500 Ohm
Residual ripple	50 µAss
Output voltage	
Output range	0/2 ... 10 V
Min. burden	> 10 kOhm
Residual ripple	50 mVss
Supply	
Voltage range AC	50 ... 253 V AC, 50/60 Hz
Nominal voltage AC	230 V AC
Voltage range DC	20 ... 253 V DC
Nominal voltage DC	24 V DC
Power consumption AC / DC	2,3 VA / 1W
Transmission behaviour	
Basic accuracy	< 0,2 % of full scale
Temperature influence	100 ppm/K of full scale
Response time	~ 20 ms
Housing	
Dimensions (WxHxD)	18x78x103 mm
Type of protection	IP 20
Connection method	screw clamp
Terminals, wire cross section	2,5 mm² flex wire / 4 mm² one wire
Bolting torque terminals	0,5 Nm
Weight	~ 100 g
Manner of fastening	35 mm DIN rail 35mm
Environmental conditions	
Ambient temperature	-10 ... 50 °C
Storage and transport	-10 ... 70 °C (no condensation)
EMC	
Product family standard	EN 61326-1 [1]
Emitted interference	EN 55011, CISPR11 Cl. B, Gr. 1
Electrical safety requirements	
Product family standard	EN 61010-1
Overvoltage category	II
Pollution degree	2
Galvanic isolation, test voltages	
Input / output	3,75 kV, 50 Hz (1 min.)
Signal / supply unit	4 kV, 50 Hz (1 min.)
Protection circuits	
Input	electrical surge protection
Output	electrical surge protection
Power supply	electrical surge and reverse current protection

[1] During checking, slight signal deviations are possible.

SALES & ADVICE

GRUBATEC MESS- UND REGELTECHNIK

MANUFACTURER

ADAMCZEWSKI Elektronische Messtechnik

Grubatec AG · Wölferstrasse 5 · CH-4414 Füllinsdorf

+41 55 617 00 80 · info@grubatec.ch · www.grubatec.ch

Subject to technical changes and printing errors.

Vario-Isolation-Amplifier

AD-TV 30 GL

Block and wiring diagram

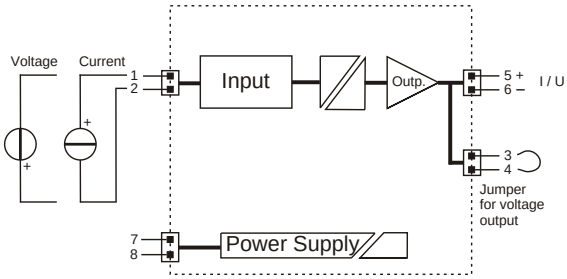

Dimensions

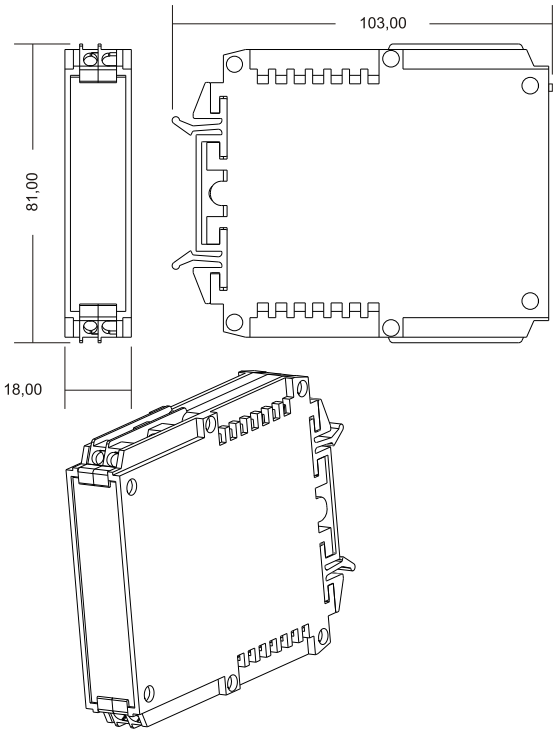

Subject to technical changes and printing errors.