Isolation Amplifier

Special Signals-Isolation Amplifier

AD-TV 310 GS

Description

The separation amplifier of type family AD-TV 310 serves the galvanic separation, conversion and amplification of unipolar signal sizes. Input, output and the supply voltage are galvanically separated from each other. The output signal is independent of the connected load up to a maximum value.

Application

Recording, galvanic 3-way separation, conversion and amplification of unipolar measuring sizes (voltage or current).



Business data

Order number

AD-TV 310 GS

Information

Downloads

Safety instructions	ad-safety-instructions.pdf

Technical specifications

Input current	
Measuring range	0...1 mA ; 0...200 mA [1]
Input resistance	25 Ohm
Input voltage	
Measuring range	0...100 mV ; 0...250 V [1]
Input resistance	100 kOhm (10 kOhm / Volt)
Output current	
Output range	0...1 mA ; 0...20 mA [1]
Max. burden	500 Ohm
Max. residual ripple	40 µAss
Output voltage	
Output range	0...1 V ; 0...10 V [1]
Min. burden	1 kOhm
Max. residual ripple	20 mVss
Supply	
Voltage range AC	50 ... 253 V AC, 50/60 Hz
Nominal voltage AC	230 V AC
Voltage range DC	20 ... 253 V DC
Nominal voltage DC	24 V DC
Input power AC/DC	3,5 VA / 1,7 W
Transmission behaviour	
Basic accuracy	< 0,2 % of full scale
Temperature influence	100 ppm/K of full scale
Frequency range	0...10 Hz (-3dB)
Housing	
Dimensions (WxHxD)	23x78x103 mm
Type of protection	IP 20
Connection method	screw clamp
Terminals, wire cross section	2,5 mm² flex wire / 4 mm² one wire
Bolting torque terminals	0,5 Nm
Weight	~ 100 g
Manner of fastening	35 mm DIN rail 35mm
Environmental conditions	
Ambient temperature	-10 ... 50 °C
Storage and transport	-10 ... 70 °C (no condensation)

Subject to technical changes and printing errors.

Special Signals-Isolation Amplifier

AD-TV 310 GS

Technical specifications

EMC

Product family standard	EN 61326-1 [2]
Emitted interference	EN 55011, CISPR11 Cl. B, Gr. 1

Electrical safety requirements

Product family standard	EN 61010-1
Overvoltage category	II
Pollution degree	2

Galvanic isolation, test voltages

Input / output	3,75 kV, 50 Hz (1 min.)
Signal / supply unit	3,3 kV, 50 Hz (1 min.)

Protection circuits

Input	electrical surge protection
Output	electrical surge protection
Power supply	Protection against overvoltage reverse polarity

1) Values must be adviced by order.
2) During checking, slight signal deviations are possible.

Block and wiring diagram

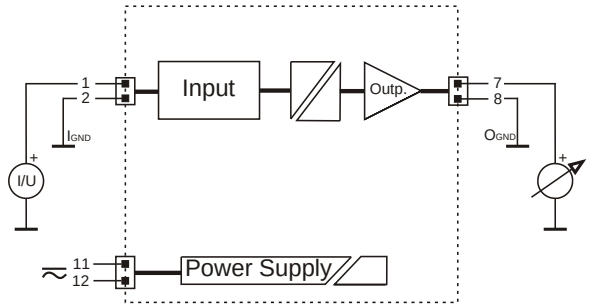

Dimensions

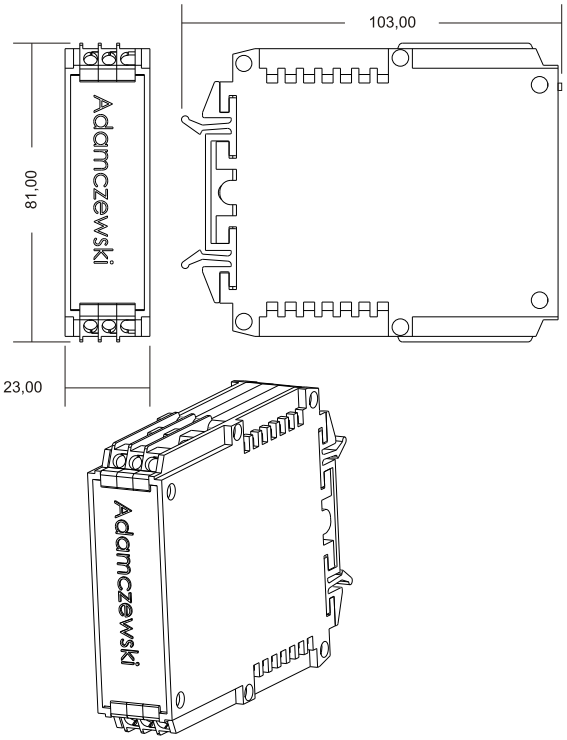

Subject to technical changes and printing errors.