Supply Isolation Amplifier

Isolation Amplifier With Reference Function

AD-TV 320 GS

Description

The set value buffer amplifier AD-TV 320 GS serves the galvanic separation, transformation and amplification of DC current and voltage signals (0/4-20mA or 0/2-10V).The device has additionally a transmitter supply and a set value function, which can be switched on. The activation of the set value function is carried out selectable with a brief depression of the key at the front or with a control signal (24V active or contact) at the remote control input. Any output set value is set with the potentiometer at the front. Activation of zero trimmers and full trimmers is possible with longer depression of the set value key. With this, the signal magnitudes are adjustable in the range of ±25%. An integral electronic wide range power pack allows operation in a wide supply area.

Application

Transformation, burden amplification and galvanic disconnection of impressed transmitter signals, current signals and voltage signals with additional simulation function via set value specification, which can be activated.



Specific characteristics

- Restoration of the last device condition on supply connection (i.e. after power cut).
- Setting of a set value is carried out undamped and independent of the trimmer positions between 0...100% of the specified output range.
- Check back contact in set value condition (closer).
- The output signal remains even with missing input signal at the output start (i.e. 4 mA).
- Configurable via AD-STUDIO.

Business data

Order number

AD-TV 320 GS

Information

Downloads

Tender text	tv320gs.zip
Safety instructions	ad-safety-instructions.pdf

Technical specifications

Transmitter supply	
Feeding voltage	26 ... 19 V (4 ... 20 mA)
Current limit	~ 25 mA
Input current	
Measuring range	0 ... 20 mA [1]
Input resistance	50 Ohm
Input voltage	
Measuring range	0 ... 10 V [1]
Input resistance	100 kOhm (10 kOhm / Volt)
Output current	
Output range	0 ... 20 mA [1]
Max. burden	500 Ohm
Max. residual ripple	40 µAss
Output voltage	
Output range	0 ... 10 V [1]
Min. burden	1 kOhm
Max. residual ripple	20 mVss
Supply	
Voltage range AC	50 ... 253 V AC, 50/60 Hz
Nominal voltage AC	230 V AC
Voltage range DC	20 ... 253 V DC
Nominal voltage DC	24 V DC
Input power AC/DC	3,5 VA / 2,0 W
Transmission behaviour	
Basic accuracy	< 0,2 % of full scale
Temperature influence	100 ppm/K of full scale
Response time	50 ms
Damping (optional)	0,1 %/s (linear max. ~950 s)
Trimmer function	+/- 25%
Linearization (optional)	24 x/y, interpoliert
Setpoint encoder	0 ... 270° = 0 ... 100 %
Remote control	
Input	Optokoppler
Voltage	10 ... 30 V DC
Pulse controlled	200 ... 1000 ms
Static	> 1000 ms
Front button	~ 200 ms
Housing	
Dimensions (WxHxD)	23x78x103 mm
Type of protection	IP 20
Connection method	screw clamp
Terminals, wire cross section	2,5 mm² flex wire / 4 mm² one wire
Bolting torque terminals	0,5 Nm
Weight	~ 100 g
Manner of fastening	35 mm DIN rail 35mm
Environmental conditions	
Ambient temperature	-10 ... 50 °C
Storage and transport	-10 ... 70 °C (no condensation)

SALES & ADVICE
GRUBATEC
MESS- UND REGELTECHNIK

MANUFACTURER
ADAMCZEWSKI
Elektronische Messtechnik

Grubatec AG · Wölferstrasse 5 · CH-4414 Füllinsdorf
+41 55 617 00 80 · info@grubatec.ch · www.grubatec.ch

Subject to technical changes and printing errors.

Isolation Amplifier With Reference Function

AD-TV 320 GS

Technical specifications

EMC

Product family standard	EN 61326-1 [2]
Emitted interference	EN 55011, CISPR11 Cl. B, Gr. 1

Electrical safety requirements

Product family standard	EN 61010-1
Overvoltage category	II
Pollution degree	2

Galvanic isolation, test voltages

Input / output	1,5 kV, 50 Hz (1 min.)
Signal / supply unit	3 kV, 50 Hz (1 min.)

Protection circuits

Input	electrical surge protection
Output	electrical surge protection
Power supply	Protection against overvoltage reverse polarity

1) Values must be adviced by order.
2) During checking, slight signal deviations are possible.

Block and wiring diagram

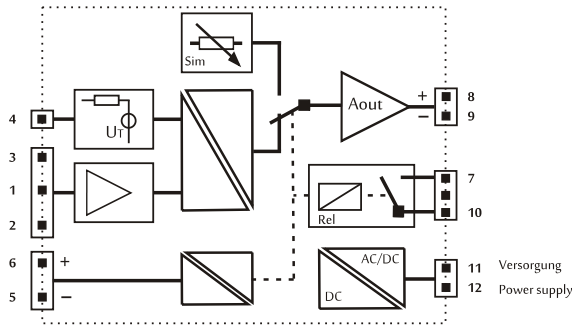

Eingangsbeschaltung / input wiring

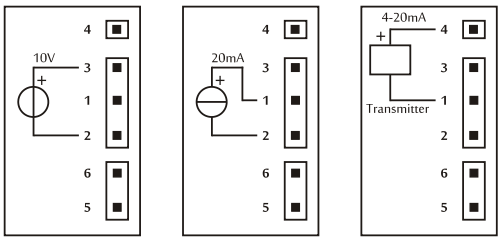

Simulationsbeschaltung / simulation wiring

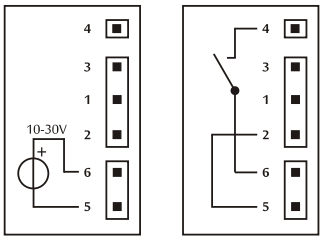

Dimensions

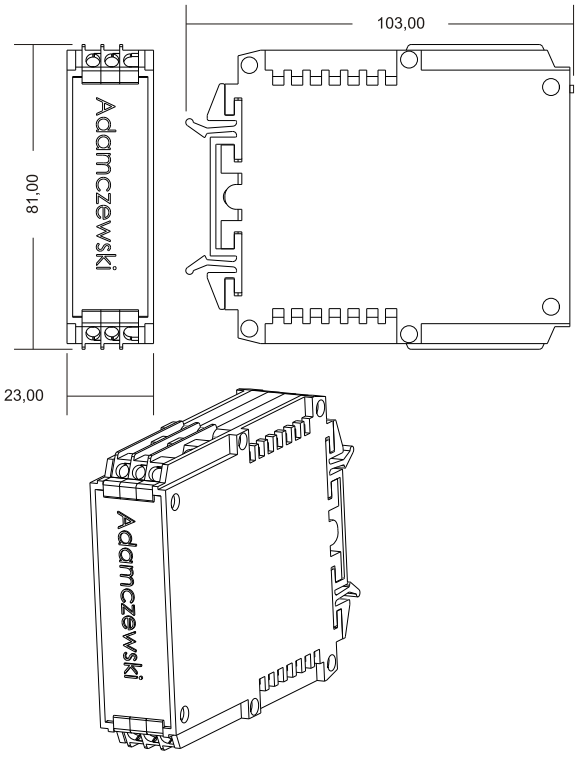

SALES & ADVICE
GRUBATEC
MESS- UND REGELTECHNIK

MANUFACTURER
ADAMCZEWSKI
Elektronische Messtechnik

Grubatec AG · Wölferstrasse 5 · CH-4414 Füllinsdorf
+41 55 617 00 80 · info@grubatec.ch · www.grubatec.ch

Subject to technical changes and printing errors.

Circuit examples

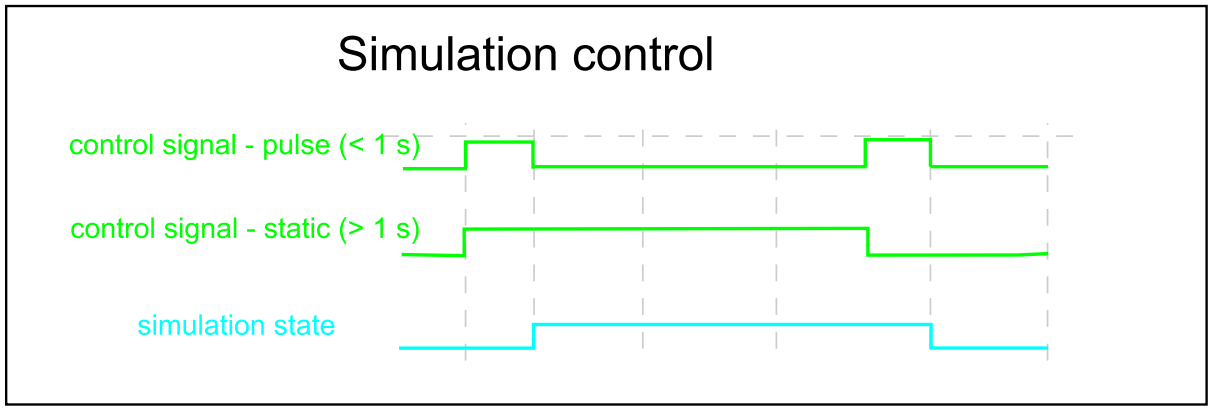

Subject to technical changes and printing errors.