Isolation Amplifier

Isolation Amplifier With Nominal Value Selector

AD-TV 32 GL

Description

The VARIO-isolation amplifier AD-TV 32 GL serves the galvanic separation, conversion and amplification of DC current and voltage signals (0/4-20 mA and 0/2-10 V DC). The signal dimensions are adjustable at the front. The starting and end values can here be adjusted independent of each other. Input, output and the supply voltage are separate from each other with high insulation. An integral electronic wide range power pack with a high degree of effectiveness allows operation in a supply range of 20...253 V DC or 50...253 V AC. Additionally, a nominal value can be specified via switch at the front at the output. The input measuring signal is decoupled and without influence during this. The nominal value at the output, which can be activated and adjusted via a potentiometer at the front.

Application

Conversion, burden amplification and galvanic decoupling of active DC-current and voltage signals with additional manual / automatic operation via a nominal value specification, which can be activated.



Specific characteristics

- Front panel switch for switching between manual and automatic operation
- Value setting for manual operation by front-face potentiometer

Business data

Order number

AD-TV 32 GL

Information

Downloads

Tender text	tv32gl.zip
Safety instructions	ad-safety-instructions.pdf

Technical specifications

Input current	
Measuring range	0/4 ... 20 mA
Input resistance	85 Ohm
Input voltage	
Measuring range	0/2 ... 10 V
Input resistance	> 100 kOhm
Output current	
Output range	0/4 ... 20 mA
Max. burden	500 Ohm
Residual ripple	50 µAss
Output voltage	
Output range	0/2 ... 10 V
Min. burden	> 10 kOhm
Residual ripple	50 mVss
Setpoint setting	
Front mounted potentiometer	0 ... 100 %
Supply	
Voltage range AC	50 ... 253 V AC, 50/60 Hz
Voltage range DC	20 ... 253 V DC
Nominal voltage AC / DC	230 V AC / 24 V DC
Power consumption AC / DC	2,3 VA / 1W
Transmission behaviour	
Basic accuracy	< 0,2 % of full scale
Temperature influence	100 ppm/K of full scale
Response time	~ 20 ms
Housing	
Dimensions (WxHxD)	18x78x103 mm
Type of protection	IP 20
Connection method	screw clamp
Terminals, wire cross section	2,5 mm² flex wire / 4 mm² one wire
Bolting torque terminals	0,5 Nm
Weight	~ 100 g
Manner of fastening	35 mm DIN rail 35mm
Environmental conditions	
Ambient temperature	-10 ... 50 °C
Storage and transport	-10 ... 70 °C (no condensation)
EMC	
Product family standard	EN 61326-1 [1]
Emitted interference	EN 55011, CISPR11 Cl. B, Gr. 1
Electrical safety requirements	
Product family standard	EN 61010-1
Overvoltage category	II
Pollution degree	2
Galvanic isolation, test voltages	
Input / output	3,75 kV, 50 Hz (1 min.)
Signal / supply unit	4 kV, 50 Hz (1 min.)
Protection circuits	
Input	electrical surge protection
Output	electrical surge protection
Power supply	electrical surge and reverse current protection

[1] During checking, slight signal deviations are possible.

SALES & ADVICE

GRUBATEC MESS- UND REGELTECHNIK

MANUFACTURER

ADAMCZEWSKI Elektronische Messtechnik

Grubatec AG · Wölferstrasse 5 · CH-4414 Füllinsdorf

+41 55 617 00 80 · info@grubatec.ch · www.grubatec.ch

Subject to technical changes and printing errors.

Isolation Amplifier With Nominal Value Selector

AD-TV 32 GL

Block and wiring diagram

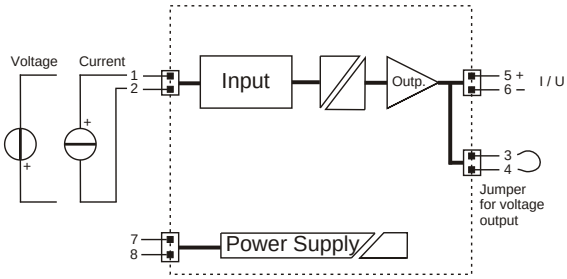

Dimensions

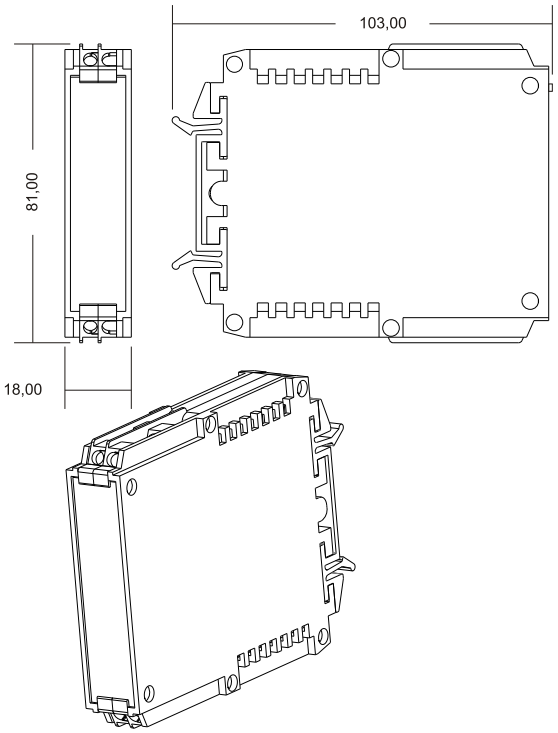

SALES & ADVICE
GRUBATEC
MESS- UND REGELTECHNIK

MANUFACTURER
ADAMCZEWSKI
Elektronische Messtechnik

Grubatec AG · Wölferstrasse 5 · CH-4414 Füllinsdorf
+41 55 617 00 80 · info@grubatec.ch · www.grubatec.ch

Subject to technical changes and printing errors.