Isolation Amplifier

Vario-Isolation-Amplifier

AD-TV 33 GL

Description

The vario-separation amplifier AD-TV 33 GL serves the galvanic separation and amplification of standard DC analogue signals.The standard signals 0-20 mA, 4-20 mA and 0-10 V are freely selectable at the front via switches at the input as well as at the output. All measuring ranges are permanent calibrated, however, they can still be adjusted via potentiometer at the front, which can be switched on. The selected output signal follows linear the input magnitude and is independent from the connected load up to a limiting value. Input, output and the supply voltage are galvanically separated from each other with a high insulation. An integral electronic wide range power pack with high efficiency prevents strong increases in temperature and allows high output loads. A high pack density is achieved in combination with the narrow type of construction. The universality saves storage costs, a diversity of types is therefore eliminated.

Application

For load amplification, galvanic decoupling and conversion of impressed standard signal measuring magnitudes.



Specific characteristics

- all standard signals at input and output are freely selectable
- switchable zero point trimmer and final value trimmer
- high output load
- 18 mm narrow housing
- wide range power supply

Business data

Order number

AD-TV 33 GL

Information

Downloads

Tender text	tv33gl.zip
Safety instructions	ad-safety-instructions.pdf

Technical specifications

Input current	
Measuring range	0 ... 20 mA
Input resistance	50 Ohm
Input voltage	
Measuring range	0 ... 10 V
Input resistance	200 kOhm
Output current	
Output range	0 ... 20 mA
Max. burden	500 Ohm
Residual ripple	20 µAss
Output voltage	
Output range	0 ... 10 V
Min. burden	500 Ohm
Residual ripple	10 mVss
Supply	
Voltage range AC	50 ... 253 V AC, 50/60 Hz
Nominal voltage AC	230 V AC
Voltage range DC	20 ... 253 V DC
Nominal voltage DC	24 V DC
Power consumption AC / DC	2,8 VA / 1,5 W
Transmission behaviour	
Basic accuracy	< 0,2 % of full scale
Temperature influence	100 ppm/K of full scale
Response time	~ 40 ms (10...90 % output signal)
Housing	
Dimensions (WxHxD)	18x78x103 mm
Type of protection	IP 20
Connection method	screw clamp
Terminals, wire cross section	2,5 mm² flex wire / 4 mm² one wire
Bolting torque terminals	0,5 Nm
Weight	~ 140 g
Manner of fastening	35 mm DIN rail 35mm
Environmental conditions	
Ambient temperature	-10 ... 50 °C
Storage and transport	-10 ... 70 °C (no condensation)
EMC	
Product family standard	EN 61326-1 [1]
Emitted interference	EN 55011, CISPR11 Cl. B, Gr. 1
Electrical safety requirements	
Product family standard	EN 61010-1
Overvoltage category	II
Pollution degree	2
Galvanic isolation, test voltages	
Input / output	2,5 kV, 50 Hz (1 min.)
Signal / supply unit	4 kV, 50 Hz (1 min.)
Protection circuits	
Input	electrical surge protection
Output	electrical surge protection
Power supply	electrical surge and reverse current protection

[1] During checking, slight signal deviations are possible.

SALES & ADVICE
GRUBATEC MESS- UND REGELTECHNIK

MANUFACTURER
ADAMCZEWSKI Elektronische Messtechnik

Grubatec AG · Wölferstrasse 5 · CH-4414 Füllinsdorf
+41 55 617 00 80 · info@grubatec.ch · www.grubatec.ch

Subject to technical changes and printing errors.

Isolation Amplifier

Vario-Isolation-Amplifier

AD-TV 33 GL

Block and wiring diagram

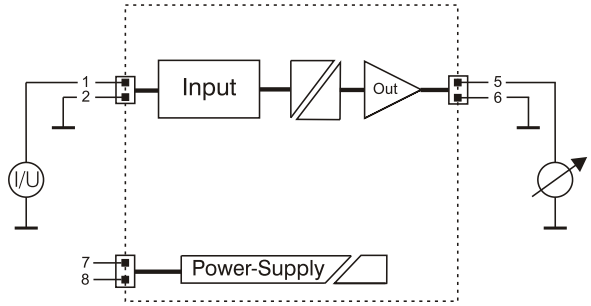

Dimensions

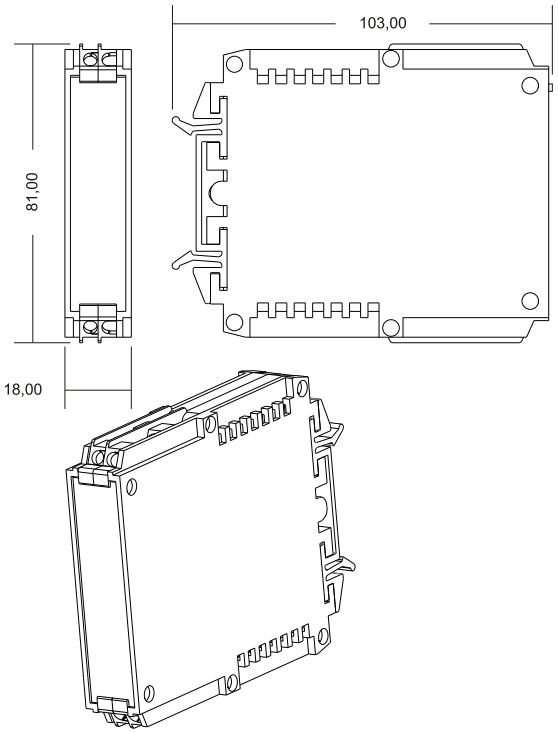

Circuit examples

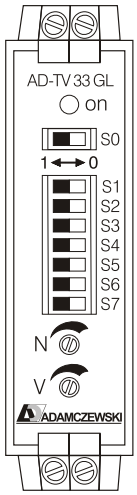

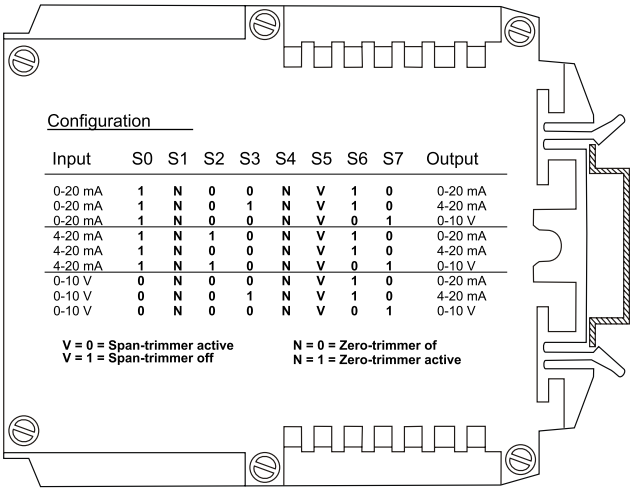

Configuration

Input	S0	S1	S2	S3	S4	S5	S6	S7	Output
0-20 mA	1	N	0	0	N	V	1	0	0-20 mA
0-20 mA	1	N	0	1	N	V	1	0	4-20 mA
0-20 mA	1	N	0	0	N	V	0	1	0-10 V
4-20 mA	1	N	1	0	N	V	1	0	0-20 mA
4-20 mA	1	N	0	0	N	V	1	0	4-20 mA
4-20 mA	1	N	1	0	N	V	0	1	0-10 V
0-10 V	0	N	0	0	N	V	1	0	0-20 mA
0-10 V	0	N	0	1	N	V	1	0	4-20 mA
0-10 V	0	N	0	0	N	V	0	1	0-10 V

V = 0 = Span-trimmer active
V = 1 = Span-trimmer off

N = 0 = Zero-trimmer of
N = 1 = Zero-trimmer active

Switch Operation:

S0: Input signal current or voltage
S1: Activation zero-trimmer
S2: Input signal 4...20 mA
S3: Output signal 4...20 mA
S4: Activation zero-trimmer
S5: Activation span-trimmer
S6: Output signal current
S7: Output signal voltage

After activation of the trimmer the calibrated values can be adjusted. If activation is restored, the device has the default values.

SALES & ADVICE
GRUBATEC
MESS- UND REGELTECHNIK

MANUFACTURER
ADAMCZEWSKI
Elektronische Messtechnik

Grubatec AG · Wölferstrasse 5 · CH-4414 Füllinsdorf
+41 55 617 00 80 · info@grubatec.ch · www.grubatec.ch

Subject to technical changes and printing errors.