Isolation Amplifier

Bipolar High-current Isolation Amplifier

AD-TV 350 GVF

Description

The bipolar high-current isolation amplifier AD-TV 350 GVF is used for the galvanic isolation, transformation and amplification of bipolar current or voltage signals. The device allows the transmission of direct as well as alternating current signals up to a high frequency range. The high-current output can supply currents up to 200 mA. Thanks to the integrated 3-way isolation, the input, output and supply voltage are high electrically isolated from each other. The efficient wide-range power supply of the AD-TV 350 GVF allows operation in a wide supply voltage range.

Application

Detection, transformation and amplification of fast changing bipolar signals (current or voltage). Directly controlling e.g. Control valves through the high current output.



Specific characteristics

- bipolar input
- bipolar high current output
- wide-range power supply

Business data

Order number

AD-TV 350 GVF	Please specify input and output data. Example. E: +/- 20 mA; A: +/- 200 mA
AD-TV 350 GVF	

Information

Downloads

Safety instructions	ad-safety-instructions.pdf

Technical specifications

Input current	
Measuring range	+/- 20 mA
Input resistance	ca. 25 Ohm
Input voltage	
Measuring range	+/- 10 V
Input resistance	ca. 100 kOhm
Output current	
Output range	+/- 200 mA
Max. burden	40 Ohm @ 200 mA
Residual ripple	300 µAss @ 200 mA
Output voltage	
Output range	+/- 10 V
Min. burden	100 Ohm @ 10 V
Residual ripple	40 mVss @ 10 V
Supply	
Voltage range AC	50 ... 253 V AC, 50/60 Hz
Nominal voltage AC	230 V AC
Voltage range DC	20 ... 253 V DC
Nominal voltage DC	24 V DC
Power consumption AC / DC	5 VA / 3 W
Transmission behaviour	
Basic accuracy	< 0,2 %
Temperature influence	70 ppm/K
Cut-off frequency	ca. 1,5 kHz (-3 dB)
Phase shift I/O	ca. 7,5 °
Power-on drift	ca. 0,1 %
Housing	
Dimensions (WxHxD)	33x110x134 mm
Type of protection	IP 20
Connection method	detachable terminal clamp
Terminals, wire cross section	2,5 mm² flex wire / 4 mm² one wire
Bolting torque terminals	0,5 Nm
Weight	~ 200 g
Manner of fastening	35 mm DIN rail 35mm
Environmental conditions	
Ambient temperature	-10 ... 50 °C
Storage and transport	-10 ... 70 °C (no condensation)
EMC	
Product family standard	EN 61326-1 [1]
Emitted interference	EN 55011, CISPR11 Cl. B, Gr. 1
Electrical safety requirements	
Product family standard	EN 61010-1
Overvoltage category	II
Pollution degree	2
Galvanic isolation, test voltages	
Signal / supply unit	3 kV, 50 Hz (1 min.)
Input / output	2,5 kV, 50 Hz (1 min.)
Protection circuits	
Input	electrical surge protection
Output	electrical surge protection
Power supply	electrical surge and reverse current protection

[1] During checking, slight signal deviations are possible.

SALES & ADVICE

GRUBATEC MESS- UND REGELTECHNIK

MANUFACTURER

ADAMCZEWSKI Elektronische Messtechnik

Grubatec AG · Wölferstrasse 5 · CH-4414 Füllinsdorf

+41 55 617 00 80 · info@grubatec.ch · www.grubatec.ch

Subject to technical changes and printing errors.

Bipolar High-current Isolation Amplifier

AD-TV 350 GVF

Block and wiring diagram

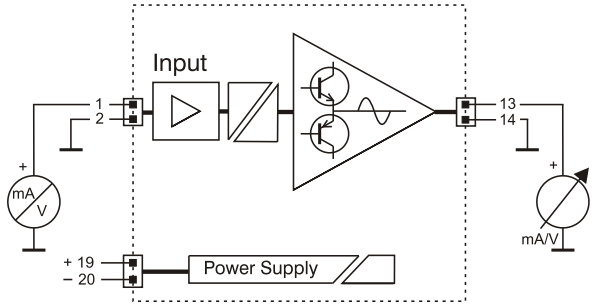

Dimensions

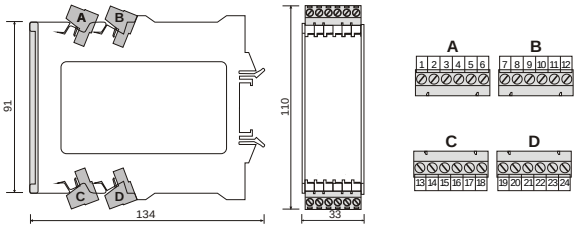

SALES & ADVICE
GRUBATEC
MESS- UND REGELTECHNIK

MANUFACTURER
ADAMCZEWSKI
Elektronische Messtechnik

Grubatec AG · Wölferstrasse 5 · CH-4414 Füllinsdorf
+41 55 617 00 80 · info@grubatec.ch · www.grubatec.ch

Subject to technical changes and printing errors.