Isolation Amplifier

Vario-Isolation-Amplifier

AD-TV 3 GX

Description

The VARIO isolation amplifier AD-TV 3 GX, with a construction width of only 6.2 mm, serves the galvanic separation, conversion and amplification of DC current signals and voltage signals (0/4-20 mA and 0/2-10 V). The signal magnitudes can be selected with DIP switches. For range changing, manual adjustment is required, the initial values and final values can be adjusted via a trimmer. The output signal follows linear the input variable and is, up to a limiting value, independent of the connected burden. Due to the narrow design, a high packing density is achieved. In combination with a DIN rail connector for bridging the supply voltage, the wiring is considerably reduced.

Application

Conversion, burden amplification and galvanic disconnection of impressed DC current signals and voltage signals.



Specific characteristics

- narrow 6.2mm construction
- Supply via DIN rail connector

Business data

Order number

AD-TV 3 GX

Accessory

DIN-rail connector	AD-GX Connector

Information

Downloads

Tender text	tv3gx.zip
Safety instructions	ad-safety-instructions.pdf

Technical specifications

Input current

Measuring range	0 ... 20 mA; 4 ... 20 mA
Input resistance	50 Ohm

Input voltage

Measuring range	0 ... 5 V; 0 ... 10 V
Input resistance	10 kOhm / V

Output current

Output range	0 ... 20 mA
Max. burden	500 Ohm
Open-circuit voltage	< 13 V

Output voltage

Output range	0 ... 10 V
Min. burden	500 Ohm
Current limit	< 28 mA

Transmission behaviour

Response time	< 50 ms (10-90 %)
Linearity error	< 0,1 % of full scale
Residual ripple	< 0,1 % of full scale
Temperature influence	< 70 ppm/K of full scale
Adjust begin	+/- 22% of full scale
Adjust end	+/- 5% of full scale

Supply

Voltage range	18 ... 30 V DC
Nominal voltage	24 V DC
Power consumption	< 850 mW

Housing

Dimensions (WxHxD)	6,2 x 92 x 101 mm³
Manner of fastening	DIN rail 35mm EN 50022
Type of protection	IP 20
Connection method	screw clamp (2,5 mm² flex wire / 4 mm² one wire)
Bolting torque terminals	0,5 Nm
Weight	~ 70 g

Environmental conditions

Ambient temperature	-10 ... +50 °C
Storage and transport	-10 ... +70 °C (no condensation)

EMC

Product family standard	EN 61326-1

During electromagnetic disturbance minor changes in output signal are possible.

Emitted interference	EN 55011, CISPR11 Cl. A, Gr. 1

Warning:
This device is not intended to be used in residential areas and can not ensure adequate protection of radio reception in such environments.

Electrical safety requirements

Product family standard	EN 61010-1
Overvoltage category	II
Pollution degree	2

Galvanic isolation, test voltages

Input/output	1,5 kV, 1 min
Signal/auxiliary voltage	1,5 kV, 1 min

SALES & ADVICE
GRUBATEC MESS- UND REGELTECHNIK

MANUFACTURER
ADAMCZEWSKI Elektronische Messtechnik

Grubatec AG · Wölferstrasse 5 · CH-4414 Füllinsdorf
+41 55 617 00 80 · info@grubatec.ch · www.grubatec.ch

Subject to technical changes and printing errors.

Vario-Isolation-Amplifier

AD-TV 3 GX

Display and operating elements

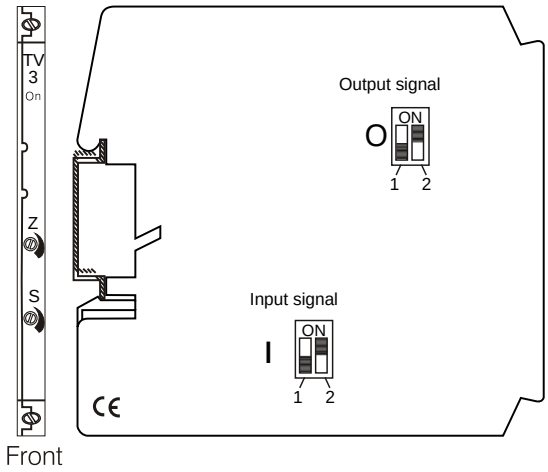

Designation	Value	Meaning
On	LED green	Power supply
Z	+/- 22 %	Adjust begin value
S	+/- 5 %	Adjust end value
Input signal		
I1 / I2	ON / OFF	Input: 0 ... 5 V
I1 / I2	OFF / OFF	Input: 0 ... 10 V
I1 / I2	OFF / ON	Input: 0 ... 20 mA
Output signal		
O1 / O2	OFF / ON	Output: 0 ... 10 V
O1 / O2	ON / OFF	Output: 0 ... 20 mA

Block and wiring diagram

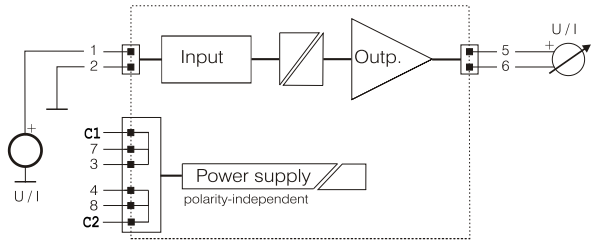

Dimensions

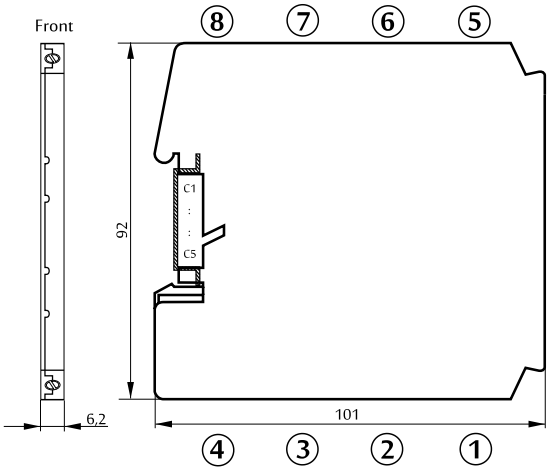

Subject to technical changes and printing errors.