Isolation Amplifier

Current Isolation Amplifier

AD-TV 411 GS

AD-TV 412 GS

Description

The single or dual channel isolation amplifier of the series AD-TV 411 GS and AD-TV 412 GS 2 is being used for the galvanical isolation and amplification of impressed currents of 0-20 mA or 4-20 mA. The output current is unaffected from the connected load. The output follows the input 1:1. Input, output and supply current are separated galvanically. All channels are isolated from each other galvanically. Through its efficient wide-range power supply unit of the isolation amplifier can be operated over a wide supply voltage range with low level of intrinsic heating.

Application

Single or dual channel burden amplification and galvanic decoupling of impressed DC current signals.



Specific characteristics

- Single or dual channel version available
- Electrical 3-way isolation
- Wide range power supply
- Narrow width housing

Business data

Order number

AD-TV 411 GS	single-channel version
AD-TV 412 GS	dual-channel version

Information

Downloads

Tender text	tv412gs.zip
Safety instructions	ad-safety-instructions.pdf

Technical specifications

Input current	
Measuring range	0 ... 20 mA or 4 ... 20 mA
Required input voltage	ca. 0,8 V
Output current	
Output range	0 ... 20 mA or 4 ... 20 mA
Max. burden	500 Ohm
Residual ripple	40 µAss
Supply	
Voltage range AC	50 ... 253 V AC, 50/60 Hz
Nominal voltage AC	230 V AC
Voltage range DC	20 ... 253 V DC
Nominal voltage DC	24 V DC
Power consumption AC / DC (AD-TV 411 GS)	4,5 VA / 1,5 W
Power consumption AC / DC (AD-TV 412 GS)	5 VA, 2,5 W
Transmission behaviour	
Basic accuracy	< 0,2 %
Temperature influence	15 ppm/K
Response time	0,2 ms
Load influence	0,02 % / 100 Ohm
Housing	
Dimensions (WxHxD)	23x78x103 mm
Type of protection	IP 20
Connection method	detachable terminal clamp
Terminals, wire cross section	2,5 mm² flex wire / 4 mm² one wire
Bolting torque terminals	0,5 Nm
Weight	~ 160 g
Manner of fastening	35 mm DIN rail 35mm
Environmental conditions	
Ambient temperature	-10 ... 50 °C
Storage and transport	-10 ... 70 °C (no condensation)
EMC	
Product family standard	EN 61326-1 [1]
Emitted interference	EN 55011, CISPR11 Cl. B, Gr. 1
Electrical safety requirements	
Product family standard	EN 61010-1
Overvoltage category	II
Pollution degree	2
Galvanic isolation, test voltages	
Input / output	0,5 kV, 50 Hz (1 min.)
Signal / supply unit	3 kV, 50 Hz (1 min.)
Channel 1 / Channel 2 (TV 412 GS)	0,5 kV, 50 Hz (1 min.)
Protection circuits	
Input	electrical surge protection
Output	electrical surge protection
Power supply	Protection against overvoltage, reverse polarity, over temperature and over current

[1] During checking, slight signal deviations are possible.

SALES & ADVICE

GRUBATEC MESS- UND REGELTECHNIK

MANUFACTURER

ADAMCZEWSKI Elektronische Messtechnik

Grubatec AG · Wölferstrasse 5 · CH-4414 Füllinsdorf

+41 55 617 00 80 · info@grubatec.ch · www.grubatec.ch

Subject to technical changes and printing errors.

Current Isolation Amplifier

AD-TV 411 GS

AD-TV 412 GS

Block and wiring diagram

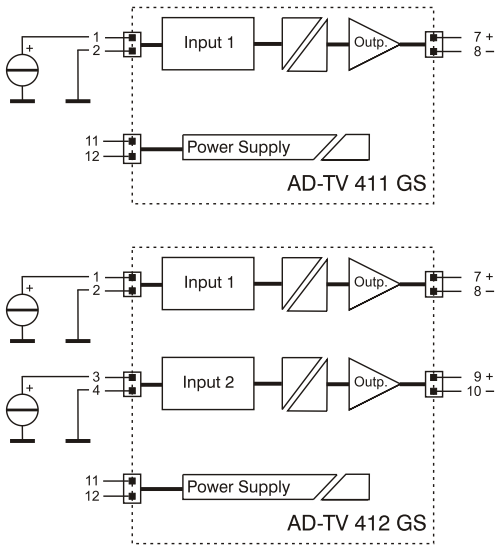

Dimensions

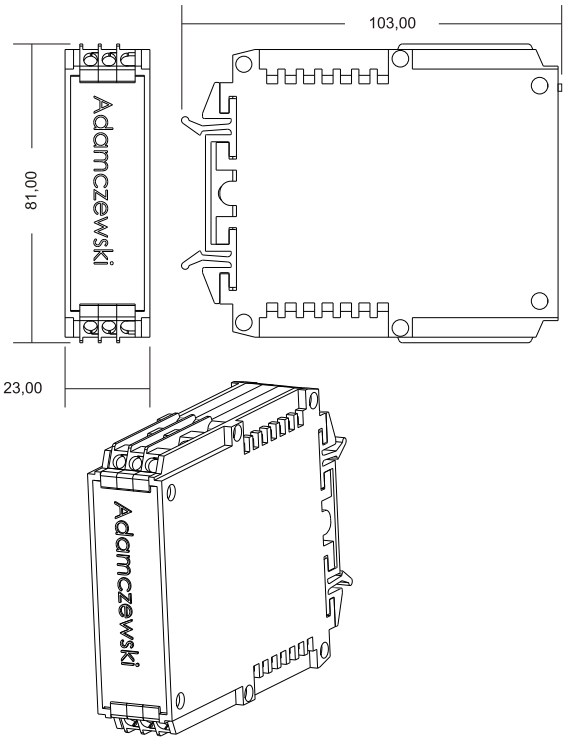

Subject to technical changes and printing errors.