Isolation Amplifier

Multiplier Isolation Amplifier

AD-TV 452 GS

Description

The multiplier separation amplifier AD-TV 452 GS serves the galvanic separation, amplification and conversion or adaption of analogue measuring signals and, at the same time, the multiplication of the input signal. The compact housing contains two synchronous output channels. All output channels are galvanic separated from each other, from the input and from the supply voltage. The type of signal can be freely selected at the input and the signal is multiplied onto the two outputs. The standard signal combinations can be selected via the connector terminals at the side of the unit. Additionally, the separation amplifier has a highly efficient electronic power pack, which admits high loads at the two outputs and causes low heat development.

Application

Galvanic separation or conversion of analogue standard signals with simultaneous multiplication.



Specific characteristics

- narrow 23mm type of construction
- two galvanic separated, synchronous current outputs

Business data

Order number

AD-TV 452 GS

Information

Downloads

Tender text	tv452gs.zip
Safety instructions	ad-safety-instructions.pdf

Technical specifications

Input	
Range current input	0 ... 20 mA
Input resistance current	50 Ohm
Range voltage input	0 ... 10 V
Input resistance voltage	100 kOhm
Current outputs	
Output range	0...20 mA
Max. burden	400 Ohm
Voltage outputs	
Output range	0...10 V
Min. burden	4 kOhm
Accuracy	
Accuracy	< 0,2 % of full scale
Linearity error	< 0,2 % of full scale
Max. residual ripple	50 mVss
Temperature influence	100 ppm/K of full scale
Max. response time	100 ms
Supply	
Voltage range	20...253 VDC / 50...253 VAC
Rated frequency	50...60 Hz
Power consumption	max. 1,3 W / 2,5 VA
Housing	
Dimensions (WxHxD)	23x78x103 mm
Type of protection	IP 20
Connection method	screw clamp
Terminals, wire cross section	2,5 mm² flex wire / 4 mm² one wire
Bolting torque terminals	0,5 Nm
Weight	~ 200 g
Manner of fastening	35 mm DIN rail
Environmental conditions	
Ambient temperature	-10 ... 50 °C
Storage and transport	-10 ... 70 °C (no condensation)
EMC	
Product family standard	EN 61326-1 [1]
Emitted interference	EN 55011, CISPR11 Cl. B, Gr. 1
Electrical safety requirements	
Product family standard	EN 61010-1
Overvoltage category	II
Pollution degree	2
Galvanic isolation, test voltages	
Input / output	2,5 kV (1 min.)
Signal / supply unit	3 kV (1 min.)
Protection circuits	
Input	electrical surge protection
Output	electrical surge protection
Power supply	electrical surge and reverse current protection

[1] During electromagnetic disturbance minor changes in output signal are possible.

SALES & ADVICE

GRUBATEC MESS- UND REGELTECHNIK

MANUFACTURER

ADAMCZEWSKI Elektronische Messtechnik

Grubatec AG · Wölferstrasse 5 · CH-4414 Füllinsdorf

+41 55 617 00 80 · info@grubatec.ch · www.grubatec.ch

Subject to technical changes and printing errors.

Multiplier Isolation Amplifier

AD-TV 452 GS

Block and wiring diagram

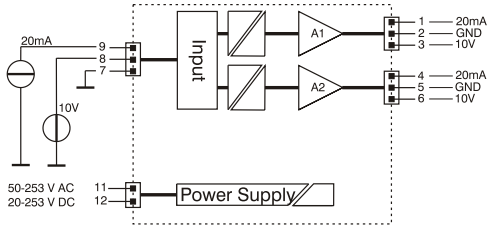

Dimensions

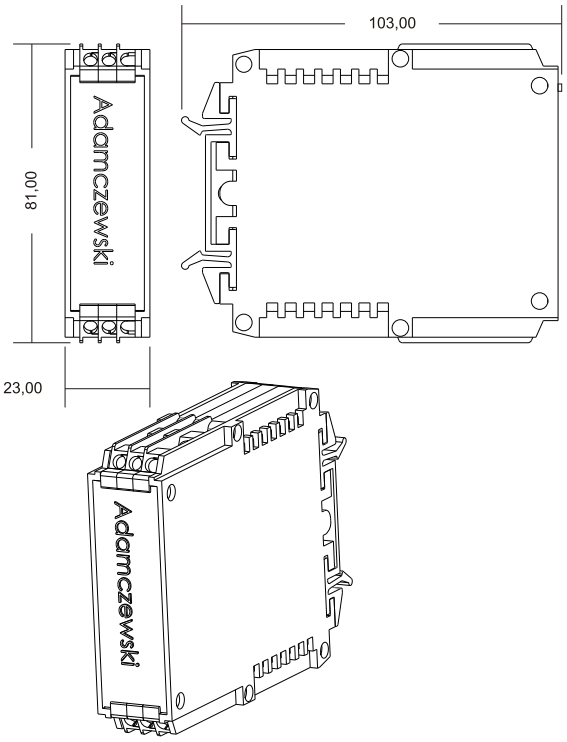

Subject to technical changes and printing errors.