Isolation Amplifier

Multiplier Isolation Amplifier

AD-TV 452 GVC

AD-TV 454 GVF

Description

The multiplier isolation amplifiers AD-TV 452 GVC and AD-TV 454 GVF are used for galvanic isolation, amplification and transformation, or adjustment of analog measurement signals with simultaneous multiplication of the input signal. The compact housing contains 2 or 4 completely independent output channels, which are galvanically isolated from the input, the supply voltage and the other outputs. The signal types at the input and the output can be selected via clamps. At the front side there are spindle trimmers (Zero Z1..2/4 / Span S1..2/4) for direct adjustment. The efficient wide range power supply allows operation in a wide supply voltage range with low heat generation.

Application

Galvanic isolation, transformation, amplification and conversion of an analog measurement signal and additional multiplication into 2 or 4 independent output channels.



Specific characteristics

- 2 galvanically isolated outputs (AD-TV 452 GVC)
- 4 galvanically isolated outputs (AD-TV 454 GVF)
- Wide range power supply
- Signal type selectable via terminals
- Start and end of measuring range adjustable via trimmer

Business data

Order number

AD-TV 452 GVC	two galvanically isolated outputs
AD-TV 454 GVF	four galvanically isolated outputs

Information

Downloads

Safety instructions	ad-safety-instructions.pdf

Technical specifications

Input current	
Measuring range	0 ... 20 mA, 4 ... 20 mA
Input resistance	50 Ohm
Input voltage	
Measuring range	0 ... 10 V, 2 ... 10 V
Input resistance	100 kOhm
Output current	
Output range	0 ... 20 mA, 4 ... 20 mA
Max. burden	400 Ohm
Residual ripple	40 µAss
Output voltage	
Output range	0 ... 10 V, 2 ... 10 V
Min. burden	10 kOhm
Residual ripple	20 mVss
Supply	
Voltage range AC	50 ... 253 V AC, 50/60 Hz
Nominal voltage AC	230 V AC
Voltage range DC	21 ... 253 V DC
Nominal voltage DC	24 V DC
Power consumption AC / DC TV 452 GVC	max 3 VA / 2 W
Power consumption AC / DC TV 454 GVF	max 5 VA / 4 W
Transmission behaviour	
Basic accuracy	< 0,2 % of full scale
Temperature influence	max 50 ppm/K of full scale
Response time	~ 20 ms
Housing	
Outlines TV 452 GVC (bxhxt)	18x110x134 mm
Outlines TV 454 GVF (bxhxt)	33x110x134 mm
Type of protection	IP 20
Connection method	detachable terminal clamp
Terminals, wire cross section	2,5 mm² flex wire / 4 mm² one wire
Bolting torque terminals	0,5 Nm
Weight TV 452 GVC	~ 130 g
Weight TV 454 GVF	~ 210 g
Manner of fastening	35 mm DIN rail 35mm
Environmental conditions	
Ambient temperature	-10 ... 50 °C
Storage and transport	-10 ... 70 °C (no condensation)

SALES & ADVICE

GRUBATEC MESS- UND REGELTECHNIK

MANUFACTURER

ADAMCZEWSKI Elektronische Messtechnik

Grubatec AG · Wölferstrasse 5 · CH-4414 Füllinsdorf

+41 55 617 00 80 · info@grubatec.ch · www.grubatec.ch

Subject to technical changes and printing errors.

Isolation Amplifier

Multiplier Isolation Amplifier

AD-TV 452 GVC

AD-TV 454 GVF

Technical specifications

EMC

Product family standard	EN 61326-1 [1]
Emitted interference	EN 55011, CISPR11 Cl. B, Gr. 1

Electrical safety requirements

Product family standard	EN 61010-1
Overvoltage category	II
Elevation	max. 2000 m
Pollution degree	2

Galvanic isolation, test voltages

Input / output	2,5 kV, 50 Hz (1 min.)
Output to output	2,5 kV, 50 Hz (1 min.)
Signal / supply unit	3 kV, 50 Hz (1 min.)

Protection circuits

Input	electrical surge protection
Output	electrical surge protection
Power supply	electrical surge and reverse current protection

[1] During checking, slight signal deviations are possible.

Display and operating elements

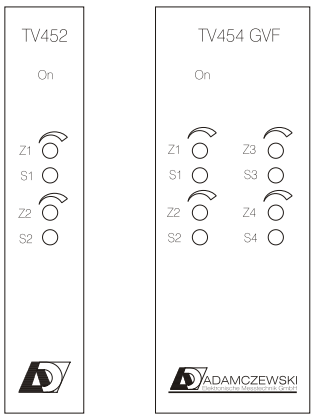

Zx = Zero trimmer - begin of measuring range
Sx = Span trimmer - end of measuring range

x = Output

Block and wiring diagram

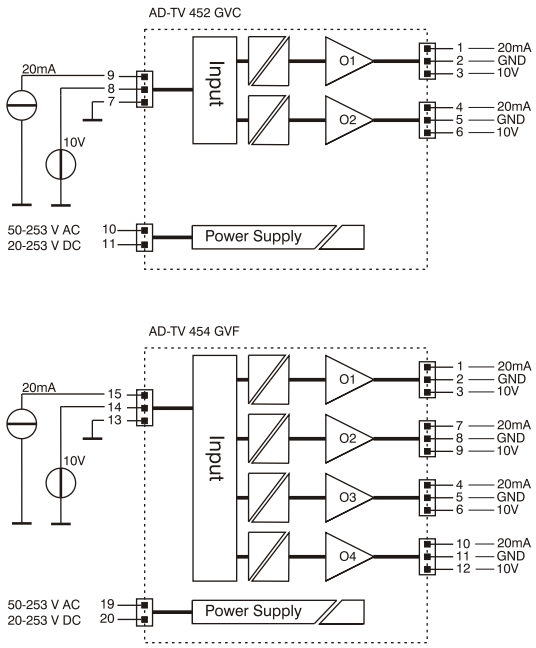

Dimensions

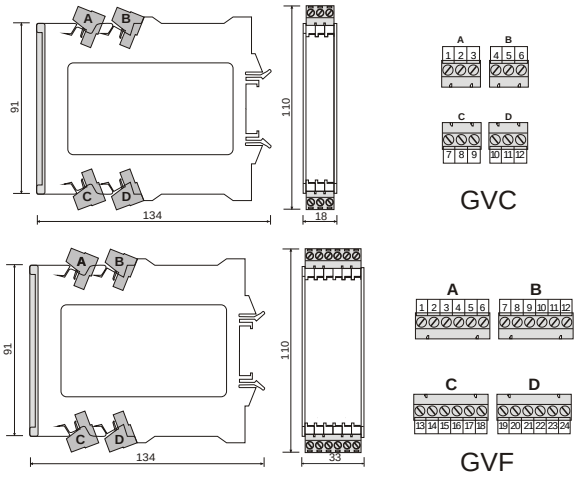

Subject to technical changes and printing errors.