AC Isolation Amplifier

AD-TV 515 GS

Description

The isolation amplifier AD-TV 515 GS serve as registry of sine wave alternating currents of sizes 0-1A AC and 0-5A AC. The alternating current is galvanically separated and converted to an impressed OC-standard signal. The alternating currents (1 A or 5 A) are supplied to the unit via high current connectors, external shunts are therefore obsolete. For the measurement of larger currents, current transformers can be connected at any time. The output signals are amplified and are independent of the connected load up to a maximum value. The signals can be adapted to the application via a frontal trimmer.

Application

Adaptation of current transformer signals (1A AC or 5A AC) to DC standard signals by simultaneous galvanic isolation and amplification.



Specific characteristics

- 1A AC current-input
- 5A AC current-input
- nominal-signal-output (0/4...20 mA or 0/2...10 V)
- zero- and span-trimmer
- Allpower power supply

Business data

Order number

AD-TV 515 GS

Information

Downloads

Safety instructions	ad-safety-instructions.pdf

Technical specifications

Input	
Measuring range	0 ... 1 A AC / 0 ... 5 A AC
Input frequency	40 ... 60 Hz (sinusoidal)
Short-term overload (1 s)	twenty times of the nominal value
Permanent overload (24 h)	120 % of the rated value
Output current	
Max. output range	0/4 ... 20 mA [1]
Max. burden	400 Ohm
Residual ripple	50 µAss
Output voltage	
Max. output range	0 .. 10 V [1]
Min. burden	1 kOhm
Residual ripple	30 mVss
Transmission behaviour	
Linearity error	max. 0,5 % of full scale
Rise time (10 ... 90%)	ca. 2 s
Temperature influence	+/- 100 ppm/K
Supply	
Supply voltage	20 ... 253 V DC / 50 ... 253 V AC
Max. power consumption	1,7 W / 3,5 VA
Housing	
Manner of fastening	DIN rail 35mm (EN 50022)
Type of protection	IP 20
Connector cross section	max. 2,5 mm²
Bolting torque screw terminals	0,5 Nm
Weight	~ 110 g
Environmental conditions	
Ambient temperature	-10 ... 50 °C
Storage and transport	-10 ... 60 °C
EMC	
Product family standard	EN 61326-1
Emitted interference	EN 55011, CISPR11 Cl. B, Gr. 1
Electrical safety requirements	
Product family standard	EN 61010-1
Overvoltage category	II
Pollution degree	2
Elevation	max. 2000 m
Safety measurement	EN 61010-2-030
Measurement category	CAT III
Max. permanent working voltage	300 V AC
Galvanic isolation, test voltages	
Input/output	4 kV (1 min)
Input/power-supply	4 kV (1 min)
Output/power-supply	3 kV (1 min)

[1] Values must be advised by order

[2] During electromagnetic disturbance minor changes in output signal are possible.

SALES & ADVICE

GRUBATEC MESS- UND REGELTECHNIK

MANUFACTURER

ADAMCZEWSKI Elektronische Messtechnik

Grubatec AG · Wölferstrasse 5 · CH-4414 Füllinsdorf

+41 55 617 00 80 · info@grubatec.ch · www.grubatec.ch

Subject to technical changes and printing errors.

AC Isolation Amplifier

AD-TV 515 GS

Block and wiring diagram

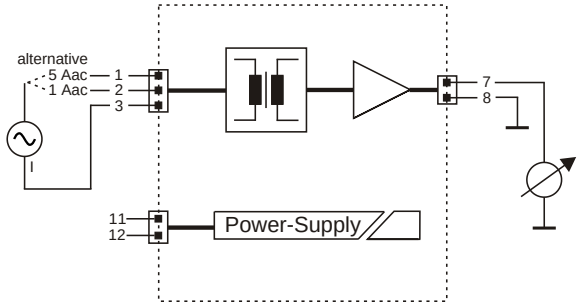

Dimensions

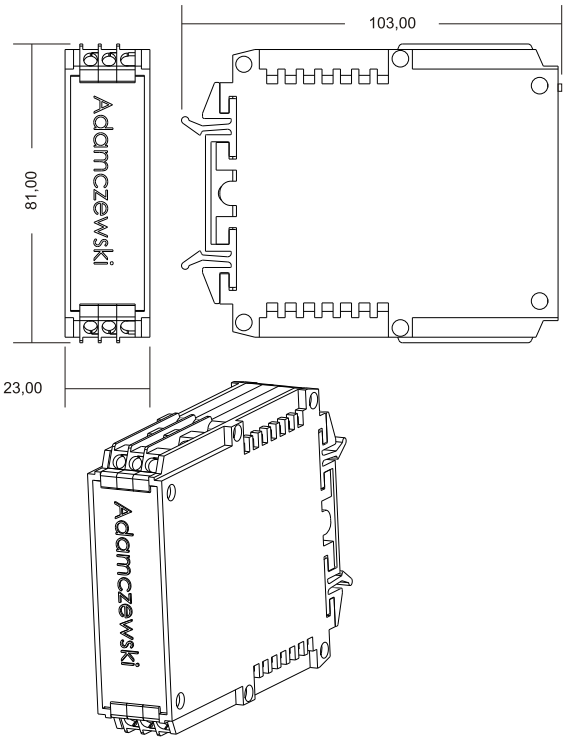

Subject to technical changes and printing errors.