AC Isolation Amplifier

AD-TV 561 GS

Description

The isolation amplified AD-TV 561 GS converts sinus wave alternating voltages to analogue, optionally according to the effective values, output signals in up to three independent channels. With the measuring principle of real effective value measuring, distorted alternating signals can also be accurately captured. Input, output, the supply voltage and the channels amongst each other are galvanically isolated from each other. The output signals are independent of the connected load up to a maximum value.

Application

Capturing, galvanic isolation, conversion and amplification of alternating voltages in analogue signals. Optional effective value conversion, adaptation and amplification of output signals of voltage converters.



Business data

Order number

AD-TV 561 GS

Information

Downloads

Safety instructions	ad-safety-instructions.pdf

Technical specifications

Input

Mess. range min/max	0 ... 30 V AC / 0 ... 600 V AC [1)]
Input frequency	50 ... 60 Hz, Sinus Grundschwingung
Input resistance	1 kOhm / V input voltage

Output current

Max. output range	0/4 ... 20 mA [1)]
Max. burden	500 Ohm

Output voltage

Max. output range	0 .. 10 V [1)]
Min. burden	1 kOhm

Transmission behaviour

Linearity error	0,3 % from the final value at fundamental
Rise time (10...90%)	700 ms
Temperature influence	+/- 100 ppm/K
Ripple current	max. 50 µAss
Ripple voltage	max. 100 mVss

Supply

Supply voltage	20 ... 253 V DC / 50 ... 253 V AC
Max. power consumption	1 W / 2,1 VA

Housing

Manner of fastening	DIN rail 35mm (EN 50022)
Type of protection	IP 20
Connector cross section	max. 2,5 mm²
Bolting torque screw terminals	0,5 Nm
Weight	~ 110 g

Environmental conditions

Ambient temperature	-10 ... 50 °C
Storage and transport	-10 ... 60 °C

EMC

Product family standard	EN 61326-1
Emitted interference	EN 55011, CISPR11 Cl. B, Gr. 1

Electrical safety requirements

Product family standard	EN 61010-1
Overvoltage category	II
Pollution degree	2
Safety measurement	EN 61010-2-030
Measurement category	CAT III

Galvanic isolation, test voltages

Input/output	4 kV (1 min)
Input/power-supply	4 kV (1 min)
Output/power-supply	3 kV (1 min)

[1)] Values must be advised by order

[2)] During electromagnetic disturbance minor changes in output signal are possible.

SALES & ADVICE
GRUBATEC MESS- UND REGELTECHNIK

MANUFACTURER
ADAMCZEWSKI Elektronische Messtechnik

Grubatec AG · Wölferstrasse 5 · CH-4414 Füllinsdorf
+41 55 617 00 80 · info@grubatec.ch · www.grubatec.ch

Subject to technical changes and printing errors.

AC Isolation Amplifier

AD-TV 561 GS

Block and wiring diagram

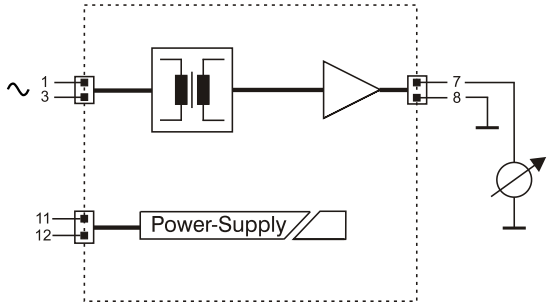

Dimensions

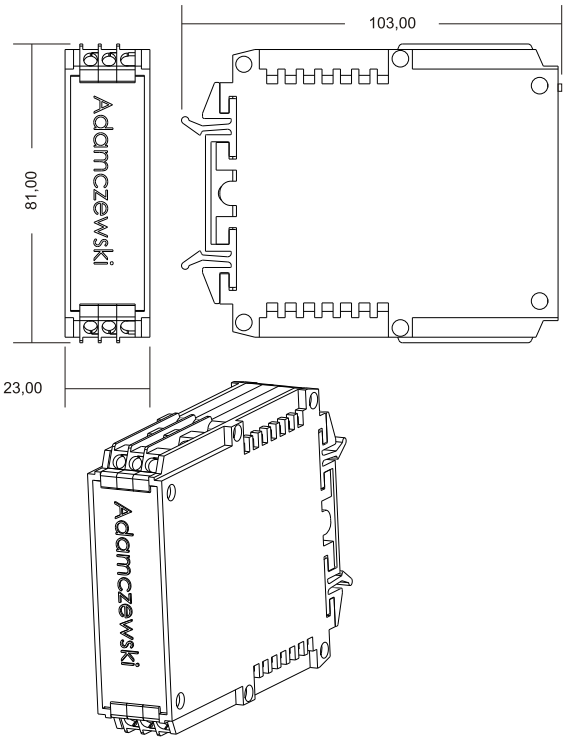

Subject to technical changes and printing errors.