AC Isolation Amplifier

AD-TV 591 GS

Description

The alternating voltage isolation amplifier AD-TV 591 GS detects the true RMS value of an alternating voltage. The input variable 0-250V AC or 0-450V AC is here freely selectable via terminal. The alternating voltage is galvanic separated and transformed into an impressed DC standard signal 0/4-20 mA or 0/2-10 VDC. The zero point and the range of the measuring signal can be adjusted with trimmers at the front. The trimmers can be activated via a wire bridge. The start of the output range can be modified via a wire bridge from 0 to 4mA or from 0 to 2V, exceeding the measuring range or falling below the measuring range is indicated with a flashing LED at the front of the device. The device can be configured with a PC software via the interface on the front interface.

Application

Freely configurable transformation of AC voltage signals to DC standard signals, with simultaneous galvanic separation.



Specific characteristics

- true-rms
- zero point trimmer and final value trimmer can be switched on
- programming via optional AD-Studio Configuration software possible

Business data

Order number

AD-TV 591 GS

Information

Downloads

Safety instructions	ad-safety-instructions.pdf

Technical specifications

Input voltage	
Measuring range	0 ... 250 V AC / 0 ... 450 V AC [1]
Input frequency	40 ... 400 Hz
Output current	
Max. output range	0 ... 20 mA [1]
Max. burden	500 Ohm
Output voltage	
Max. output range	0 .. 10 V [1]
Min. burden	10 kOhm
Transmission behaviour	
Trim range	+/-20 % [1]
Linearity error	0,5 % of full scale
Measuring time	20 ms (1 Period)
Rise time (90%)	200 ms (min. 60 ms) [3]
Response time	220 ms (min. 80 ms) [3]
Temperature influence	+/- 100 ppm/K
Supply	
Supply voltage	20 ... 253 V DC / 50 ... 253 V AC
Max. power consumption	1,2 W / 2,2 VA
Housing	
Manner of fastening	DIN rail 35mm (EN 50022)
Type of protection	IP 20
Connector cross section	max. 2,5 mm²
Bolting torque screw terminals	0,5 Nm
Weight	~ 120 g
Environmental conditions	
Ambient temperature	-10 ... 50 °C
Storage and transport	-10 ... 60 °C
EMC	
Product family standard	EN 61326-1
Emitted interference	EN 55011, CISPR11 Cl. B, Gr. 1
Electrical safety requirements	
Product family standard	EN 61010-1
Overvoltage category	II
Pollution degree	2
Safety measurement	EN 61010-2-030
Measurement category	CAT III
Galvanic isolation, test voltages	
Input/output	4 kV (1 min)
Input/power-supply	4 kV (1 min)
Output/power-supply	3 kV (1 min)

[1] Different values must be advised by order

[2] During electromagnetic disturbance minor changes in output signal are possible.

[3] Filter 5 (Filter 0).

AC Isolation Amplifier

AD-TV 591 GS

Block and wiring diagram

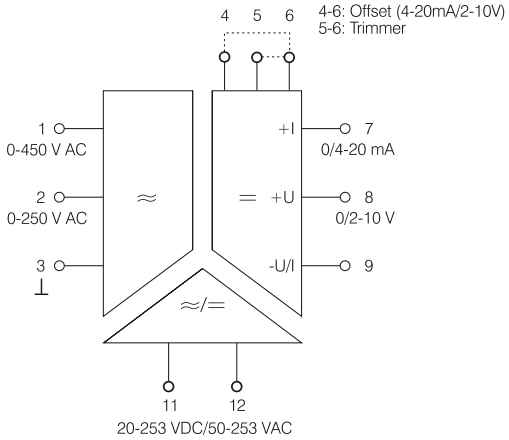

Dimensions

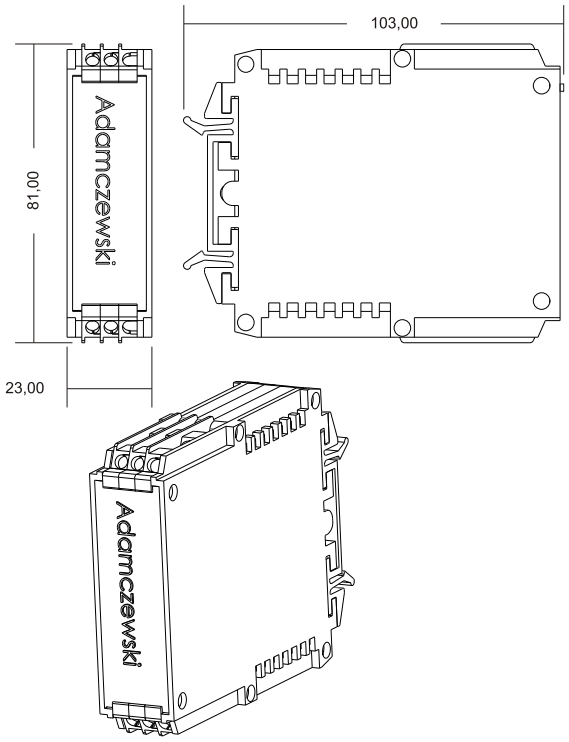

Subject to technical changes and printing errors.