Isolation Amplifier

Isolation Amplifier (bipolar)

AD-TV 810 GS

Description

The separation amplifier of type family AD-TV 810 serves the galvanic separation, conversion and amplification of bipolar signal sizes. The very high frequency range allows direct current as well as alternating current transfers. Input, output and the supply voltage are galvanically separated from each other. The output signal is independent of the connected load up to a maximum value. The limit frequency of the amplifier can be set at the front as an option.

Application

Recording, galvanic 3-way separation, conversion and amplification of bipolar measuring sizes (voltage or current).



Specific characteristics

- 3dB bandwidth switch (0,1 / 0,5 / 1 / 2 / 20 kHz) are optionally available.

Business data

Order number

AD-TV 810 GS

Information

Downloads

Tender text	tv810gs.zip
Safety instructions	ad-safety-instructions.pdf

Technical specifications

Input current	
Measuring range	-20 ... 20 mA [1]
Input resistance	25 Ohm
Input voltage	
Measuring range	-10 ... 10 V [1] (max. +/- 250V)
Input resistance	100 kOhm (10 kOhm / Volt)
Output current	
Output range	-20 ... 20 mA [1]
Max. burden	500 Ohm
Max. residual ripple	40 µAss
Output voltage	
Output range	-10 ... 10 V [1]
Min. burden	1 kOhm
Max. residual ripple	20 mVss
Supply	
Voltage range AC	50 ... 253 V AC, 50/60 Hz
Nominal voltage AC	230 V AC
Voltage range DC	20 ... 253 V DC
Nominal voltage DC	24 V DC
Input power AC/DC	3,5 VA / 1,7 W
Transmission behaviour	
Basic accuracy	< 0,2 % of full scale
Temperature influence	100 ppm/K of full scale
Frequency range	0...20 kHz (-3dB)
Housing	
Dimensions (WxHxD)	23x78x103 mm
Type of protection	IP 20
Connection method	screw clamp
Terminals, wire cross section	2,5 mm² flex wire / 4 mm² one wire
Bolting torque terminals	0,5 Nm
Weight	~ 100 g
Manner of fastening	35 mm DIN rail 35mm
Environmental conditions	
Ambient temperature	-10 ... 50 °C
Storage and transport	-10 ... 70 °C (no condensation)

SALES & ADVICE

GRUBATEC MESS- UND REGELTECHNIK

MANUFACTURER

ADAMCZEWSKI Elektronische Messtechnik

Grubatec AG · Wölferstrasse 5 · CH-4414 Füllinsdorf

+41 55 617 00 80 · info@grubatec.ch · www.grubatec.ch

Subject to technical changes and printing errors.

Isolation Amplifier (bipolar)

AD-TV 810 GS

Technical specifications

EMC

Product family standard	EN 61326-1 [2]
Emitted interference	EN 55011, CISPR11 Cl. B, Gr. 1

Electrical safety requirements

Product family standard	EN 61010-1
Overvoltage category	II
Pollution degree	2

Galvanic isolation, working voltage

Input / output	250 V DC or ACeff
Input / supply unit	300 V DC or ACeff
Output / supply unit	300 V DC or ACeff

Galvanic isolation, test voltages

Input / output	3 kV, 50 Hz (1 min.)
Input / supply unit	3 kV, 50 Hz (1 min.)
Output / supply unit	3 kV, 50 Hz (1 min.)

Protection circuits

Input	electrical surge protection
Output	electrical surge protection
Power supply	Protection against overvoltage reverse polarity

1) Values must be adviced by order.
2) During checking, slight signal deviations are possible.

Block and wiring diagram

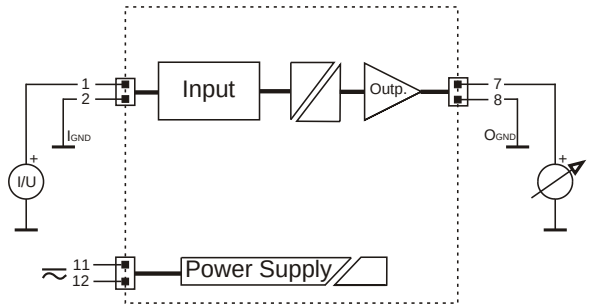

Dimensions

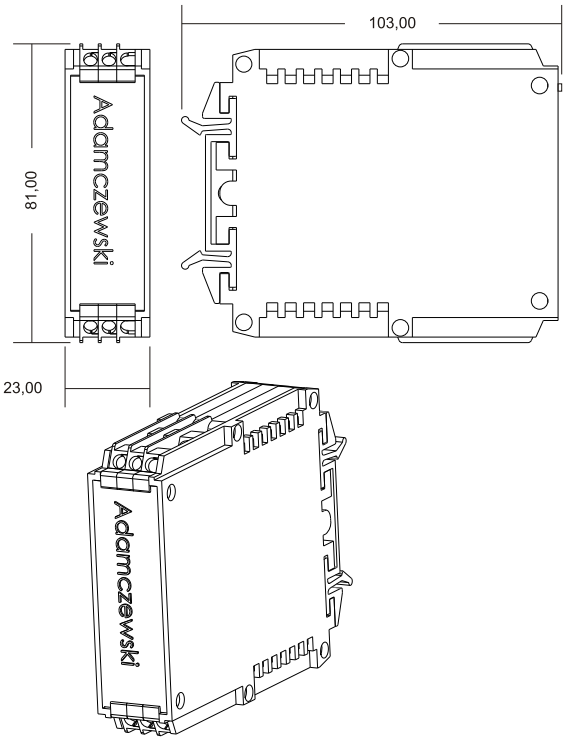

Subject to technical changes and printing errors.