Isolation Transmitter

AD-TWT 24 GM

Description

The isolation transmitter AD-TWT 24 GM in 2-wire-transmitter technique impress into a supply voltage a standard measurement signal of 4-20 mA. The output signal follows linear the input signal up to a maximum value. The connection of an additional auxiliary voltage is not necessary. It obtains its auxiliary energy from the transmitter supply.

Application

Economical galvanical isolation of a active analog signal in a impressed passive 4-20mA signal (2-wire-transmitter technique).



Specific characteristics

- 2-wire-transmitter technique, low amount of cabling
- output signal of 4-20 mA independent from supply voltage
- compact design (DIN rail)

Business data

Order number

AD-TWT 24 GM

Information

Downloads

Safety instructions	ad-safety-instructions.pdf

Technical specifications

Input current	
Measuring range	4 ... 20 mA
Required input voltage	2,7 V (4 V no load)
Transmitter output	
Output range	4 ... 20 mA
Feeding voltage	8 - 30 V DC
Residual ripple	max. 0,5 % of full scale
Transmission behaviour	
Basic accuracy	< 0,2 % of full scale
Temperature influence	150 ppm/K of full scale
Response time	~ 700 ms
Housing	
Dimensions (WxHxD)	13x78x103 mm
Type of protection	IP 20
Connection method	screw clamp
Terminals, wire cross section	2,5 m² flex wire / 4 mm² one wire
Bolting torque terminals	0,5 Nm
Weight	~ 100 g
Manner of fastening	35 mm DIN rail 35mm
Environmental conditions	
Ambient temperature	-10 ... 50 °C
Storage and transport	-10 ... 70 °C (no condensation)
EMC	
Product family standard	EN 61326-1 [1]
Emitted interference	EN 55011, CISPR11 Cl. B, Gr. 1
Electrical safety requirements	
Product family standard	EN 61010-1
Overvoltage category	II
Pollution degree	2
Maximum permanent working voltage across the galvanic isolation	45 V DC
Galvanic isolation, test voltages	
Input / output	510 V, 50 Hz (1 min.)
Protection circuits	
Input	electrical surge and reverse current protection
Output	electrical surge protection

[1] During checking, slight signal deviations are possible.

SALES & ADVICE

GRUBATEC MESS- UND REGELTECHNIK

MANUFACTURER

ADAMCZEWSKI Elektronische Messtechnik

Grubatec AG · Wölferstrasse 5 · CH-4414 Füllinsdorf
+41 55 617 00 80 · info@grubatec.ch · www.grubatec.ch

Subject to technical changes and printing errors.

Isolation Transmitter

AD-TWT 24 GM

Block and wiring diagram

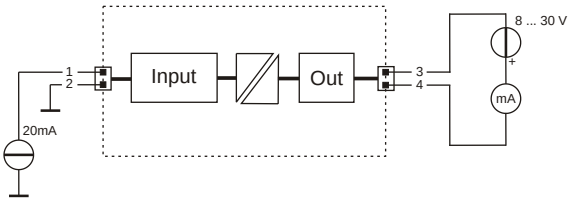

Dimensions

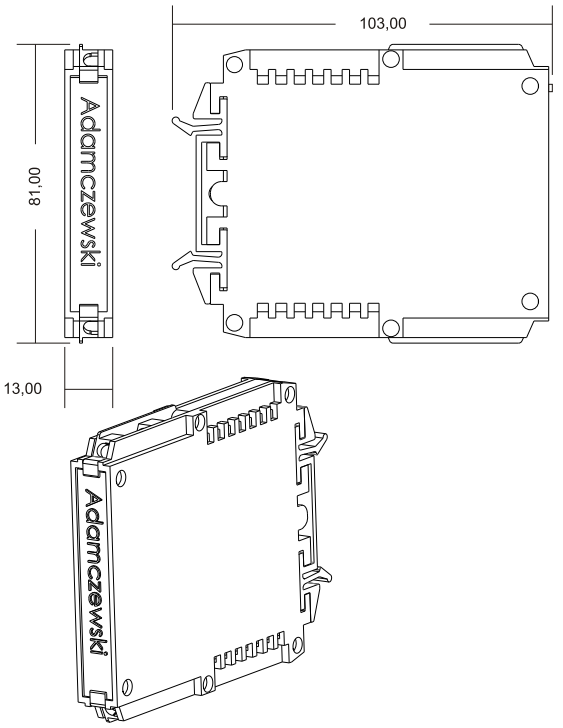

Subject to technical changes and printing errors.