Multifunction Transducer

AD-VC 1 GVD

Description

The digital multi-function measuring transformers of series VarioCheck AD-VC 1 are freely programmable digital measuring transducers with two analogue outputs and up to 4 limiting value relays. Extensive standard equipment and additional options solve almost all imaginable tasks of a modern evaluation. All measuring ranges and outputs can be freely parameterized. This can be carried out via the optional operating modul AD-VarioControl or via the programming software AD-Studio. VarioCheck AD-VC 1 fulfils all tasks of a universal and secure measuring value recording through integral function modules such as limiting value messages, freely adjustable hysteresis, selectable relay functions, time-delayed switching, automatic or manual simulation modus, free linearizing curves and a wide range of supply voltage.



Specific characteristics

- bipolar current input
- bipolar mV voltage input
- voltage input
- Power supply for 2-wire transmitters
- Thermocouples inputs, types J, T, K, E, N, S, R, B, C; internal or external reference junction
- Resistance thermometer inputs, types Pt/Ni 100, Pt/Ni 500, Pt/Ni 1000
- Resistance, Potentiometer input
- Sensor error detection for thermocouples and resistance thermometers
- Input of a characteristic curve possible
- Automatic or manual simulation operation
- 2 bipolar current or voltage output
- 23 mm / 33 mm narrow housing with detachable terminal clamp
- Operating module AD-VarioControl as an accessory

Business data

Order number

AD-VC1 GVD-R0	Type GVD, no relay output
AD-VC1 GVD-R2	Type GVD, two relay outputs
AD-VC1 GVF-R4	Bauform GVF, vier Relaisausgänge

Accessory (optional)

Operating module	AD-VarioControl
Control panel with RS-485	AD-VarioConnect
USB programming adapter	AD-VarioPass
Configuration software	AD-Studio

Information

Downloads

Operation manual VarioControl	man-variocontrol-ad-en.pdf
Tender text	vc1gvd.zip
Safety instructions	ad-safety-instructions.pdf

Technical specifications

Input current

Measuring range	-24 ... + 24 mA DC
Input resistance	20 Ohm
Basic accuracy	4 µA

Transmitter supply

Off-load voltage	24,0 V
Voltage at 20mA	18,0 V
Current limit	~ 25 mA

Input voltage

Measuring ranges	0 ... + 12 V DC
Input resistance	1 MOhm
Basic accuracy	1 mV

Input voltage mV [1)]

Measuring ranges	-15 ... +15 mV -30 ... +30 mV -60 ... +60 mV -125 ... +125 mV -250 ... +250 mV
Input resistance	1 MOhm
Basic accuracy	20 µV

Thermocouples

Comparative place:	
Internal	measurement with sensor in the device connecting terminals
External	Cold junction temperature selectable by parameters

SALES & ADVICE
GRUBATEC MESS- UND REGELTECHNIK

MANUFACTURER
ADAMCZEWSKI Elektronische Messtechnik

Grubatec AG · Wölferstrasse 5 · CH-4414 Füllinsdorf
+41 55 617 00 80 · info@grubatec.ch · www.grubatec.ch

Subject to technical changes and printing errors.

Multifunction Transducer

AD-VC 1 GVD

Technical specifications

To DIN EN 60584:	
measuring range type J	-200 ... +1200 °C
measuring range type T	-200 ... +400 °C
measuring range type K	-200 ... +1360 °C
measuring range type E	-200 ... +1000 °C
measuring range type N	-200 ... +1300 °C
basic accuracy	1 K
To DIN EN 60584:	
measuring range type S	-40 ... +1760 °C
measuring range type R	-40 ... +1760 °C
measuring range type B	+400 ... +1800 °C
basic accuracy	2 K
After standard ASTM E988:	
measuring range type C	0 ... +2320 °C
basic accuracy	2 K

Resistance input [1]

Resistance thermometer inputs DIN EN 60751: Pt100, Pt500 and Pt1000 DIN 43760: Ni100, Ni500 and Ni1000	
measuring range Pt	-200 ... +850 °C
measuring range Ni	-60 ... +230 °C
smallest measuring spans	20 K
short circuit detection	< 20 Ohm
basic accuracy	0,2 K
Linear resistance	
measuring range	0 ... 4000 Ohm
basic accuracy	0,1 Ohm
Connection method	2-, 3- oder 4-wire system
Sensor supply	100 µA
Max line resistance [2]	50 Ohm/cable

Potentiometer input

Connection method	3-wire system
Max. Resistance	50 Ohm ... 100 kOhm
Sensor supply	<=500µA
Cable length	< 30 m, Do not leave the building

Current outputs

Max. output range	-21,5 ... 21,5 mA DC
Max. burden	400 Ohm
Residual ripple	20 µAss

Voltage outputs

Max. output range	-10,5 ... 10,5 V DC
Min. burden	10 kOhm
Residual ripple	10 mVss

Relay outputs A...D

Contacts R2 / R4	2 changeover contacts / 4 changeover contacts
Max. AC-breaking capacity	250 V AC, 2 A AC, 50Hz
Max. DC-breaking capacity	40 V DC, 2 A DC
Switching operations	
Mechanical	10^7
AC: 230V / 2A, cos(phi)=1	$6 * 10^5$
AC: 230V / 2A, cos(phi)=0,4	$2 * 10^5$
DC: 24V / 1A	$2 * 10^5$

Transmission behaviour

Linearity error	< 0,2 % of the measuring range
Temperature influence	+/- 120 ppm/K of the measuring range
Rise time	500 ms (0...90 %, 100...10 %)
Rise time (temperature input)	< 1s (0...90 %, 100...10 %)

Supply

Voltage range AC	50 ... 253 V AC, 50/60 Hz
Voltage range DC	20 ... 253 V DC
Nominal voltage AC / DC	230 V AC / 24 V DC
Power consumption AC / DC	5,4 VA / 3,4 W
Power consumption with operating module AC / DC	5,6 VA / 3,8 W

Housing GVD

Dimensions (WxHxD)	23x110x134 mm
With operating module (bxhxt)	23x110x138 mm
Type of protection	IP 20
Connection method	detachable terminal clamp
Terminals, wire cross section	2,5 mm² flex wire / 4 mm² one wire
Bolting torque terminals	0,5 Nm
Weight	~ 150 g
Manner of fastening	35 mm DIN rail 35mm

Housing GVF

Dimensions (WxHxD)	33x110x134 mm
With operating module (bxhxt)	33x110x138 mm
Type of protection	IP 20
Connection method	Abziehbare Schraubklemmen
Terminals, wire cross section	2,5 mm² Litze / 4 mm² Draht
Bolting torque terminals	0,5 Nm
Weight	~ 200 g
Manner of fastening	35 mm Normschiene

Environmental conditions

Ambient temperature	-10 ... 70 °C
Storage and transport	-20 ... 70 °C (no condensation)

EMC

Product family standard [3]	EN 61326-1
Emitted interference	EN 55011, CISPR11 Cl. B, Gr. 1

Electrical safety requirements

IP protection rating	2 (EN 60529)
Product family standard	EN 61010-1
Overvoltage category	II
Elevation	max. 2000 m
Pollution degree	2

Galvanic isolation, working voltage [4]

Input / output	300 V DC or ACeff EN 61010-1:Table 6/7 [5] [6]
Input / supply unit	300 V DC or ACeff EN 61010-1:Table 4 [5]
Output / supply unit	300 V DC or ACeff EN 61010-1:Table 4 [5]

Galvanic isolation, test voltages

Input / output	2,5 kV, 50 Hz / 1 min. EN 61010-1: Tabelle 6/7 [5] [6]
Input / supply unit	4 kV, 50 Hz / 1 min. EN 61010-1: Tabelle 5 [5]
Output / supply unit	4 kV, 50 Hz / 1 min. EN 61010-1: Tabelle 5 [5]

[1] A shielded cable must be used as the connection cable

[2] With 2-conductor the line resistance comes as an offset into the measurement.

[3] During electromagnetic disturbance minor changes in output signal are possible.

[4] Maximum voltage permanently across the insulation.

[5] Double or reinforced insulation.

[6] Maximum continuous input common-mode rise relative to ground: 50 V ACeff or 120 V DC

SALES & ADVICE
GRUBATEC MESS- UND REGELTECHNIK

MANUFACTURER
ADAMCZEWSKI Elektronische Messtechnik

Grubatec AG · Wölferstrasse 5 · CH-4414 Füllinsdorf
+41 55 617 00 80 · info@grubatec.ch · www.grubatec.ch

Subject to technical changes and printing errors.

Multifunction Transducer

AD-VC 1 GVD

Display and operating elements



On: LED for operating display in green
on - normal operation
flashing - Signal failure, signal outside range limits
Rel: two LEDs for relays A and B in red
on - relay activated
AD-PC: Communication interface for configuration by a PC
Communication interface for VarioControl

Block and wiring diagram

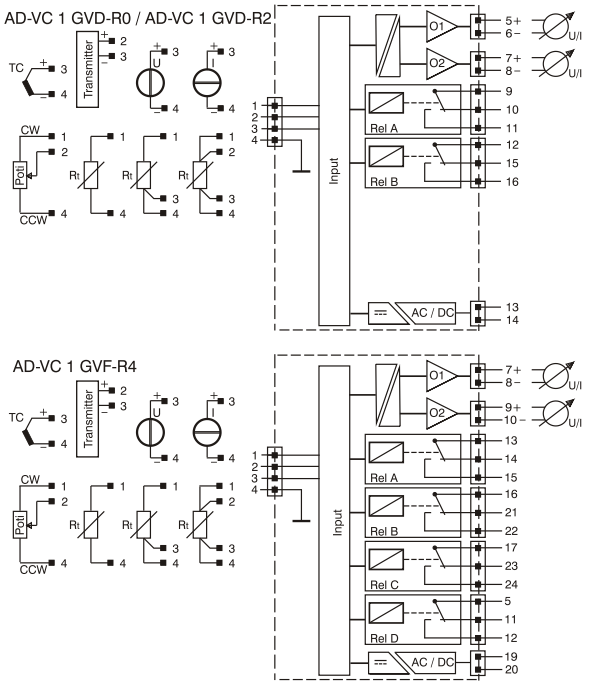

Dimensions

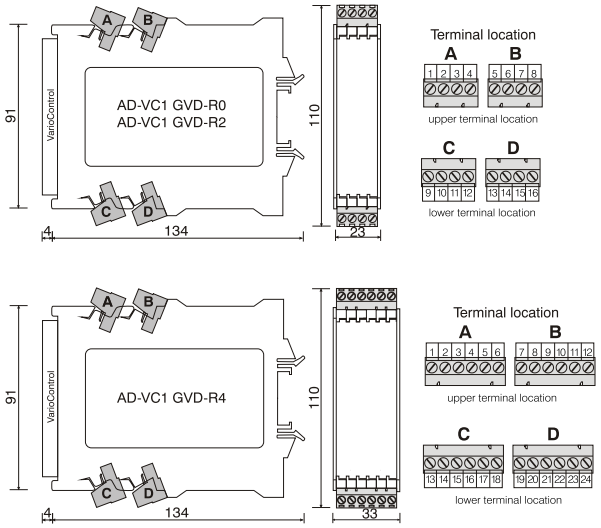

Subject to technical changes and printing errors.

Modbus Communication

The optional AD-VarioConnect operating module has an RS-485 interface. The data is transferred via the Modbus RTU protocol, the AD-VarioConnect operating module represents a Modbus slave. Communication takes place according to the master-slave procedure and starts with a request from the master, e.g. from a PLC or a PC. Each bus participant must have a unique address. If a slave detects that its address has been addressed by the master, the slave always sends an answer. The slaves never communicate with each other. They are also not able to start a communication with the master.
The Modbus master can read out the individual registers of the AD-VC 1 GVD via the addresses.
The default standard data format is 19200,e,8,1 with slave address 1. These settings can be changed via the AD-VarioConnect operating module.

Start address	Number of registers	Name	Unit	Data type	read	write
Measured values:						
40101	2	Input signal	InUnit	7	1	0
40103	2	Cold-junction temperature	°C	7	1	0
40301	2	Output signal 1	OutUnit	7	1	0
40303	2	Output signal 2	OutUnit	7	1	0
40601	1	Relay state A		3	1	0
40602	1	Relay state B		3	1	0
40615	1	Relay state C		3	1	0
40616	1	Relay state D		3	1	0
40801	2	Scaled input	ScUnit	7	1	0

Legend of the datatypes:

U08: 1	**S08:** 2	**U16:** 3	**S16:** 4	**U32:** 5	**S32:** 6	**float:** 7