Multifunction Transducer

AD-VC 3 GF
AD-VC 3 GVF
AD-VC 3 EV

Description

The digital multi-function measuring transformers of series VarioCheck AD-VC 3 are freely programmable digital measuring transducers with two analogue outputs and up to 4 limiting value relays. Extensive standard equipment and additional options solve almost all imaginable tasks of a modern evaluation. Enter all characteristics directly on the device or use the configuration software „AD-Studio“. VarioCheck AD-VC 3 fulfils all tasks of a universal and secure measuring value recording through integral function modules such as limiting value messages, freely adjustable hysteresis, selectable relay functions, time-delayed switching, automatic or manual simulation modus, free linearizing curves and a wide range of supply voltage.



Specific characteristics

- Bipolar voltage/current inputs
- Supply of 2-/3-wire transmitter
- Potentiometer input
- Current and voltage output, differently scalable and can be utilised simultaneously
- Error message with missing or defective sensor at measuring range 4-20 mA
- LCD for display of different operating modes, lit in several colours (R/Y/B).
- Freely definable scaling of the quantity to be measured through stating range, decimal point position and unit from the list or defined unit.
- Zoom function, expanded scale, linearizing, inverse mode
- Learning Mode Range
- Automatic or manual simulation operation
- Monitoring of the measuring signal with up to 4 freely adjustable limiting values
- Slave pointer function (saving min. and max. value)
- Locking the parameterizing via edit lock
- Non-volatile saving of all set parameter
- Menu languages switchable to: German, English
- Housing GVF, GF and EV
- in the housing GVF Pluggable and codable terminal strips

Business data

Order number

AD-VC 3 GF-R0	Bauform GF, without relay
AD-VC 3 GF-R2	Bauform GF, two relays
AD-VC 3 GF-R4	Bauform GF, four relays
AD-VC 3 GVF-R0	design GVF, without relay
AD-VC 3 GVF-R2	design GVF, two relays
AD-VC 3 GVF-R4	design GVF, four relays
AD-VC 3 EV-R2-24V	Bauform EV, zwei Kontaktausgänge, 24 VDC-Versorgung
AD-VC 3 EV-R2-230V	Bauform EV, zwei Kontaktausgänge, 230 VAC-Versorgung

Information

Downloads

Instruction manual	man-vc3-ad-en.pdf
Safety instructions	ad-safety-instructions.pdf

Technical specifications

Input current

Measuring range	-20 ... + 20 mA
Accuracy	5 µA
Input resistance	60 Ohm

Voltage input 10V

Measuring range	-10 ... + 10 V
Accuracy	2,5 mV
Input resistance	1 MOhm

Voltage input 1V

Measuring range	-1 ... + 1 V
Accuracy	250 µV
Input resistance	> 1 MOhm

Potentiometer input

Connection method	3-wire system
Max. Resistance	100 Ohm ... 100 kOhm

Transmitter supply

Off-load voltage	24,5 V
Voltage at 20mA	19,5 V
Current limit	~ 25 mA

Output current

Max. output range	0 ... 20,4 mA
Accuracy	~ 20 µA
Max. burden	500 Ohm
Residual ripple	20 µAss

Output voltage

Max. output range	0 ... 10,2 V (EV: 12,5 V)
Accuracy	~ 10 mV
Min. burden	5 kOhm
Residual ripple	10 mVss

SALES & ADVICE
GRUBATEC MESS- UND REGELTECHNIK

MANUFACTURER
ADAMCZEWSKI Elektronische Messtechnik

Grubatec AG · Wölferstrasse 5 · CH-4414 Füllinsdorf
+41 55 617 00 80 · info@grubatec.ch · www.grubatec.ch

Subject to technical changes and printing errors.

Multifunction Transducer

AD-VC 3 GF
AD-VC 3 GVF
AD-VC 3 EV

Technical specifications

Resolution

Input	13 bit
Output	10 bit

Relay outputs A...D

Contacts R2 / R4	2 contacts / 4 contacts
Max. AC-breaking capacity	250 V AC, 2 A AC, 50Hz
Max. DC-breaking capacity	50 V DC, 2 A DC
Switching operations	
Mechanical	10^7
AC: 230V / 2A, cos(phi)=1	$6 * 10^5$
AC: 230V / 2A, cos(phi)=0,4	$2 * 10^5$
DC: 24V / 1A	$2 * 10^5$
DC: 24V / 1A	$2 * 10^5$

Display

Graphic-LCD	42x64 Pixel, background RGB lights
Digital display	4-digit, can be configured
Display function	scaled input signal, input signal, output, limits, scaled dimension as quasi analogue bar, scaling unit

Transmission behaviour

Linearity error	0,2 % of full scale
Rise time	100 ms (output auf 90 %)
Temperature influence	+/- 100 ppm/K of full scale

Supply

Power supply GF/GVF	20 ... 253 V DC / 50 ... 253 V AC
Power supply EV	20..30 VDC or 50...253 VAC
Max. power consumption GF	3,0 W / 5,3 VA
Max. power consumption GVF	2,6 W / 5 VA
Max. power consumption EV	2,6 W / 5 VA

Housing GF

Dimensions (WxHxD)	38,5x78x103 mm
Type of protection	IP 20
Connection method	screw clamp
Terminals, wire cross section	2,5 mm² flex wire / 4 mm² one wire
Bolting torque terminals	0,5 Nm
Weight	~ 215 g
Manner of fastening	35 mm DIN rail 35mm

Housing GVF

Dimensions (WxHxD)	33x110x134 mm
Type of protection	IP 20
Connection method	detachable terminal clamp
Terminals, wire cross section	2,5 mm² flex wire / 4 mm² one wire
Bolting torque terminals	0,5 Nm
Weight	~ 200 g
Manner of fastening	35 mm DIN rail 35mm

Housing EV

Dimensions (WxHxD)	30,48x128,4x165
Type of protection	IP00
Connection method	32-pin male connector
Weight	~ 300 g
Manner of fastening	19"-Eurocard

Environmental conditions

Ambient temperature	-10 ... 60 °C
Storage and transport	-10 ... 70 °C (no condensation)

EMC

Product family standard [1)]	EN 61326-1
Emitted interference	EN 55011, CISPR11 Cl. B, Gr. 1

[1)]During electromagnetic disturbance minor changes in output signal are possible.

Electrical safety requirements

Product family standard	EN 61010-1
Overvoltage category	II
Pollution degree	2

Galvanic isolation, test voltages

Input/output	2,5 kV (1 min)
Signal/auxiliary voltage	3 kV (1 min)

Subject to technical changes and printing errors.

Multifunction Transducer

AD-VC 3 GF
AD-VC 3 GVF
AD-VC 3 EV

Block and wiring diagram

Wiring: casing-type GF and GVF

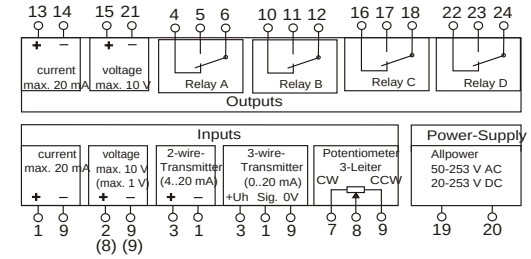

Wiring: casing-type EV (europe-card)

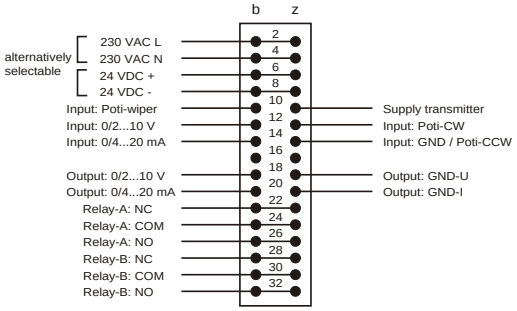

Dimensions

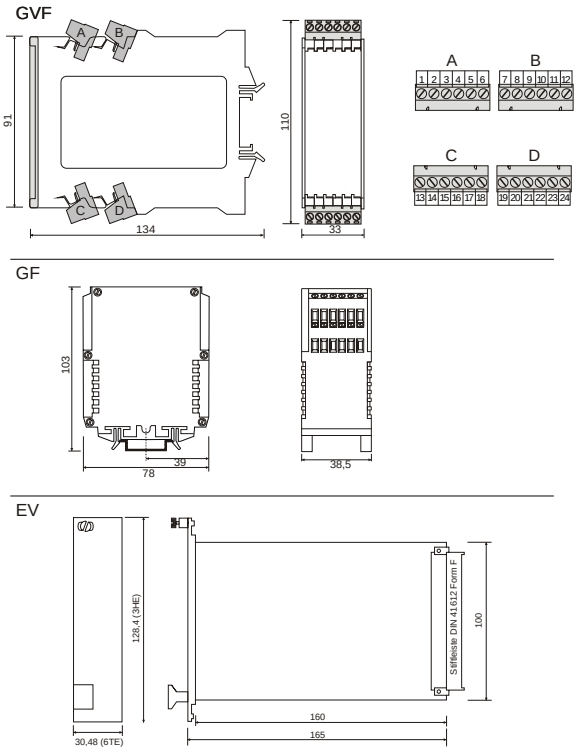

SALES & ADVICE
GRUBATEC
MESS- UND REGELTECHNIK

MANUFACTURER
ADAMCZEWSKI
Elektronische Messtechnik

Grubatec AG · Wölferstrasse 5 · CH-4414 Füllinsdorf
+41 55 617 00 80 · info@grubatec.ch · www.grubatec.ch

Subject to technical changes and printing errors.