Multifunction Transducer

AD-VC 4S FE

Description

The digital multi-function measuring transformer of series VarioCheck AD-VC 4S FE are freely programmable digital measuring transformer with two analogue outputs and up to 4 limiting value relays. Extensive standard equipment and additional options solve almost all imaginable tasks of a modern evaluation. The input of all characteristics directly on the device, or use the configuration software „AD-Studio“. VarioCheck AD-VC 4S fulfils all tasks of a universal and secure measuring value recording through integral function modules such as limiting value messages, freely adjustable hysteresis, selectable relay functions, time-delayed switching, automatic or manual simulation modus, free linearizing curves and a wide range of supply voltage.



Specific characteristics

- Bipolar voltage inputs
- Unipolar current input
- Supply of 2-/3-wire transmitter
- Potentiometer input
- Current and voltage output, differently scalable and can be utilised simultaneously
- Error message with missing or defective sensor at measuring range 4-20 mA
- Backlite LCD for display of different operating modes
- Freely definable scaling of the quantity to be measured through stating range, decimal point position and unit from the list or defined unit.
- Zoom function, expanded scale, linearizing, inverse modus
- Learning Mode Range
- Automatic or manual simulation operation
- Monitoring of the measuring signal with up to 4 freely adjustable limiting values
- Slave pointer function (saving min. and max. value)
- Locking the parameterizing via edit lock
- Non-volatile saving of all set parameter
- Menu languages switchable to: German, English, French, Italian
- Pluggable and codable terminal strips

Business data

Order number

AD-VC 4S FE-R0	without relay
AD-VC 4S FE-R2	two relays
AD-VC 4S FE-R4	four relays

Information

Downloads

Instruction manual	vc4handb.pdf
Tender text	vc4s.zip
Safety instructions	ad-safety-instructions.pdf

Technical specifications

Input current

Measuring range	0 ... + 20 mA
Accuracy	~ 21 µA
Input resistance	< 51 Ohm

Voltage input 10V

Measuring range	-10 ... + 10 V
Accuracy	~ 21 mV
Input resistance	100 kOhm

Voltage input 5V

Measuring range	-5 ... + 5 V
Accuracy	~ 11 mV
Input resistance	100 kOhm

Voltage input 1V

Measuring range	-1 ... + 1 V
Accuracy	~ 2,5 mV
Input resistance	100 kOhm

Voltage input 100mV

Measuring range	-100 ... + 100 mV
Accuracy	~ 0,3 mV
Input resistance	100 kOhm

Potentiometer input

Connection method	3-wire system
Max. Resistance	> 100 Ohm

Transmitter supply

Off-load voltage	~ 23 V
Voltage at 20mA	~ 21 V
Current limit	~ 55 mA

SALES & ADVICE

GRUBATEC MESS- UND REGELTECHNIK

MANUFACTURER

ADAMCZEWSKI Elektronische Messtechnik

Grubatec AG · Wölferstrasse 5 · CH-4414 Füllinsdorf

+41 55 617 00 80 · info@grubatec.ch · www.grubatec.ch

Subject to technical changes and printing errors.

Multifunction Transducer

AD-VC 4S FE

Technical specifications

Output current

Max. output range	0 ... 20 mA
Accuracy	~ 20 µA
Max. burden	500 Ohm
Residual ripple	20 µAss

Output voltage

Variants	R2, R4
Max. output range	0 ... 10 V
Accuracy	~ 10 mV
Min. burden	10 kOhm
Residual ripple	10 mVss

Resolution

Input	10 bit
Output	10 bit

Relay outputs A...D

Contacts R2 / R4	2 changeover contact / 4 changeover contact
Max. AC-breaking capacity	250 V AC, 2 A AC, 50Hz
Max. DC-breaking capacity	50 V DC, 2 A DC
Switching operations	
Mechanical	10^7
AC: 230V / 2A, cos(phi)=1	$6 * 10^5$
AC: 230V / 2A, cos(phi)=0,4	$2 * 10^5$
DC: 24V / 1A	$2 * 10^5$
DC: 24V / 1A	$2 * 10^5$

Display

Graphic-LCD	122x32 Pixel, background lit
Digital display	5-digit, can be configured
Display function	scaled input signal, input signal, output, limits, scaled dimension as quasi analogue bar, scaling unit

Transmission behaviour

Linearity error	< 0,2 % of full scale
Rise time	100 ms (output at 90 %)
Temperature influence	+/- 100 ppm/K of full scale

Supply

Supply voltage	20 ... 253 V DC / 50 ... 253 V AC
Max. power consumption	2,6 W / 5 VA

Housing

Manner of fastening	Panel-mount-case (DIN 43 700)
Dimensions front	IP 65
Type of protection housing	IP 20
Connector cross section	1,0 mm² Strand with wire end ferrule / 1,5 mm² one wire
Connector cross section supply	max. 2,5 mm²
Weight	~ 320 g
Front panel cut out	92 x 44 mm

Environmental conditions

Ambient temperature	-10 ... 60 °C
Storage and transport	-10 ... 70 °C (no condensation)

EMC

Product family standard [1)]	EN 61326-1
Emitted interference	EN 55011, CISPR11 Cl. B, Gr. 1

[1)] During electromagnetic disturbance minor changes in output signal are possible.

Electrical safety requirements

Product family standard	EN 61010-1

Galvanic isolation, test voltages

Input/output	2,5 kV (1 min)
Signal/auxiliary voltage	4 kV (1 min)

Block and wiring diagram

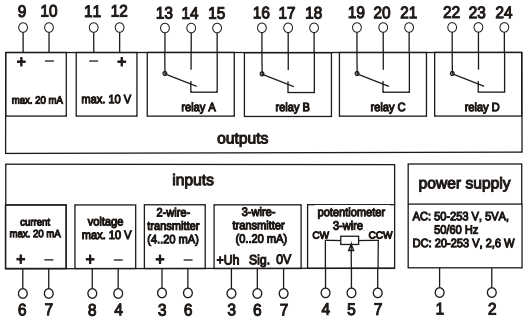

Dimensions

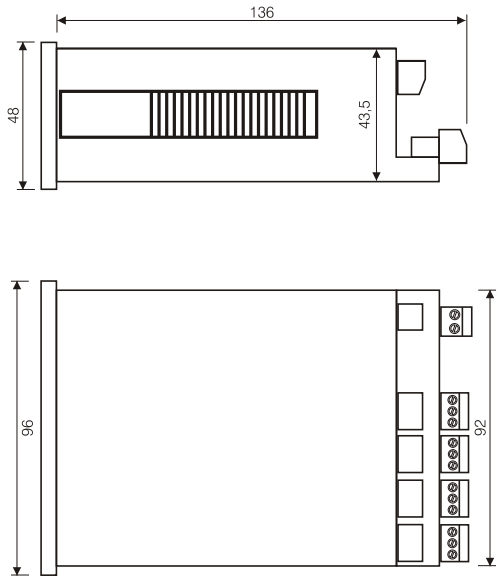

Subject to technical changes and printing errors.