Multifunction Transducer

Temperature Measuring Converter

AD-VC 5 GVF

Description

The digital temperature measuring converter of series VarioCheck VC5B are freely programmable digital measuring transducer with two analogue outputs and up to 4 limiting value relays. The input of all characteristics directly on the device, or use the configuration software „AD-Studio“. VarioCheck fulfils all tasks of a universal measuring value recording through integral function modules such as selectable relay functions, simulation modus, free linearizing curves and a wide range of supply voltage.



Specific characteristics

- Resistance thermometer inputs, types Pt/Ni 100, Pt/Ni 500, Pt/Ni 1000
- Thermocouples inputs, types J, T, K, E, N, S, R, B, C or inputs a mV/T-characteristic curve. Selectable internal or external reference junction
- A bipolar mV-Voltage input. Free linearizing curves possible.
- Current- and voltage input different scaleable and simultaneously useful. Must not conntect the clamps 8 and 9.
- Galvanic 3-circuit separation of input, output and supply.
- LCD for display of different operating modes, lit in several colours (R/Y/B).
- Freely definable scaling of the quantity to be measured through stating range, decimal point position and unit from the list or defined unit.
- Zoom function, expanded scale, linearizing, inverse modus.
- Monitoring of the measuring signal with up to 4 freely adjustable limiting values.
- Monitoring functions such as limiting values, window function or signal trend each with relay.
- Non-volatile saving of all set parameters.

Business data

Order number

AD-VC 5 GVF-R0	without relay
AD-VC 5 GVF-R2	two relays
AD-VC 5 GVF-R4	four relays

Information

Downloads

Instruction manual	man-vc5-ad-en.pdf
Tender text	vc5gvf.zip
Safety instructions	ad-safety-instructions.pdf

Technical specifications

Resistance thermometer inputs Pt100, Pt500, Pt1000 to DIN EN 60751

Measuring range	-200 ... +850 °C
Connection method	2-, 3- oder 4-wire system
Resolution	16 Bit
Accuracy	0,5 K
Smallest measuring spans	20 K
Max line resistance [1]	10 Ohm/cable
Sensor supply	
Pt100	1 mA
Pt500, Pt1000	210 µA

[1] With 2-conductor the line resistance comes as an offset into the measurement.

Resistance thermometer inputs Ni100, Ni500, Ni1000 to DIN EN 43760

Measuring range	-60 ... +230 °C
Connection method	2-, 3- oder 4-wire system
Resolution	16 Bit
Accuracy	0,5 K
Smallest measuring spans	20 K
Max line resistance [1]	10 Ohm/cable
Sensor supply	
Ni100	1 mA
Ni500, Ni1000	210 µA

[1] With 2-conductor the line resistance comes as an offset into the measurement.

Thermocouples

Comparative place:	
Internal	measurement with LM35 in the device connecting terminals
External	Cold junction temperature selectable by parameters
Resolution	16 Bit
Accuracy	0,2 % of measuring range
Measuring range type J	-200 ... +1200 °C
To DIN EN 60584:	
Measuring range type T	-200 ... +400 °C
Measuring range type K	-200 ... +1360 °C
Measuring range type E	-200 ... +1000 °C
Measuring range type N	-200 ... +1300 °C
Measuring range type S	-40 ... +1760 °C
Measuring range type R	-40 ... +1760 °C
Measuring range type B	+400 ... +1800 °C
After standard ASTM E988:	
Measuring range type C	0 ... +2320 °C
Smallest measuring spans	100 K

SALES & ADVICE
GRUBATEC MESS- UND REGELTECHNIK

MANUFACTURER
ADAMCZEWSKI Elektronische Messtechnik

Grubatec AG · Wölferstrasse 5 · CH-4414 Füllinsdorf
+41 55 617 00 80 · info@grubatec.ch · www.grubatec.ch

Subject to technical changes and printing errors.

Multifunction Transducer

Temperature Measuring Converter

AD-VC 5 GVF

Technical specifications

Voltage inputs

Measuring ranges	-18 ... +18 mV -36 ... +36 mV -72 ... +72 mV -144 ... +144 mV

Current output 20 mA

Output range	0 ... 20,4 mA
Resolution	10 Bit
Accuracy	20 µA
Max. burden	500 Ohm
Residual ripple	20 µAss

Voltage output 10 V

Output range	0 ... 10,2 V
Resolution	10 Bit
Accuracy	10 mV
Min. burden	5 kOhm
Residual ripple	10 mVss

If current ouput and voltage ouput are used at the same time, both circles may not be connected.

Relay outputs A..D

Max switching voltage	AC 250 V AC
Max switching current AC	2 A AC
Max switching voltage	DC 50 V DC
Max switching current DC	2 A DC

Display

Graphic-LCD	42x64 Pixel, background RGB lights
Digital display	4-digit, can be configured
Display function	scaled input signal, input signal, output, limits, scaled dimension as quasi analogue bar, scaling unit

Transmission behaviour

Sampling rate	1 measure/s
Linearity error	0,2 % of full scale
Temperature influence	+/-100 ppm/K of full scale

Supply

Supply voltage	50 ... 253 V AC 20 ... 253 V DC
Max power consumption at 24V DC	2,6 W
Max power consumption at 230V AC	5 VA

Housing

Dimension	BxHxT 33x110x128 mm
Manner of fastening	DIN rail mounting 35mm, EN 50022
Type of protection	IP 20
Connection method	detachable terminal clamp, 5 mm grid
Wire cross section	max. 2,5 mm^2
Weight	~ 200 g

Environmental conditions

Permissible ambient temperature	-10 ... +60 °C
Storage and transport	-10 ... 70 °C (no condensation)

EMC

Product family standard [1)]	EN 61326-1
Emitted interference	EN 55011, CISR11 Cl. B, Gr. 1

[1)] Während der Störeinwirkung sind geringe Signalabweichungen möglich.

Electrical safety requirements

Product family standard	EN 61010-1

Galvanic isolation, test voltages

Input to output	2,5 kV, 1min
Input/output to auxiliary voltages	4 kV, 1min
Outputs together	no galvanic isolation
Input to the programming interface	no galvanic isolation

Block and wiring diagram

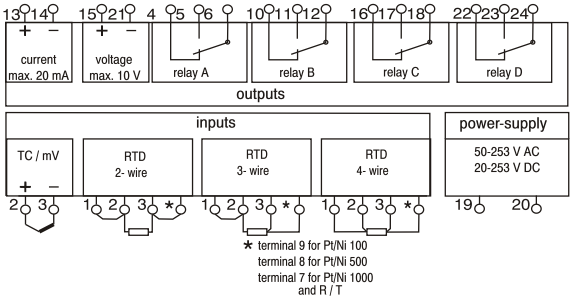

Dimensions

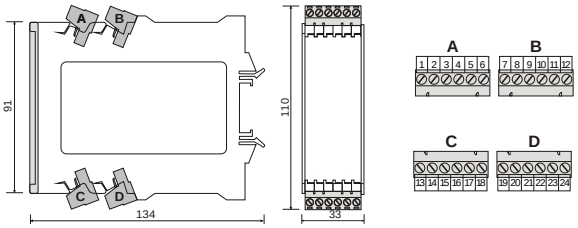

SALES & ADVICE

GRUBATEC MESS- UND REGELTECHNIK

MANUFACTURER

ADAMCZEWSKI Elektronische Messtechnik

Grubatec AG · Wölferstrasse 5 · CH-4414 Füllinsdorf

+41 55 617 00 80 · info@grubatec.ch · www.grubatec.ch

Subject to technical changes and printing errors.