Non-Contact Temperature Measurement

DIGITAL – INFRARED – PYROMETER

Temperature range 100 to 1400°C (212 - 2552°F)

Temperature control during production process
compact units – Infrared – measuring transducer and electronic process unit in one case with light beam aiming device, fiber optic, serial interface, limit output

Series KTRD 1465

Infrared – pyrometer can also assist you to monitor your heating processes, ensuring a uniform standard of quality for your products.

leaflet KTRD 1465

GRUBATEC

Grubatec AG
Wölferstrasse 5
4414 Füllinsdorf
Telefon: +41 (0)55 617 00 80
Telefax: +41 (0)55 617 00 81
www.grubatec.ch
sales@grubatec.ch

Infrared-Digital-Pyrometer Series KTRD 1465

More than 60 years experience in the area of non-contact temperature measurement and permanently development of the pyrometers makes it possible to offer you a complete program of field tested units..
Mainly for **fast warming processes** the **contactless temperature measurement** is suitable.
The **series KTRD 1465** are **digital part radiation pyrometer** with fiber optic and optic system in compact structure likewise suitable for industry, research and laboratory.
With the integrated light beam aiming device (green LED) an adjusting of the pyrometer to the measuring object is very easy.
The temperature linear analog output signal 0/4 up to 20 mA is available for measuring- and controlling purposes.
The simultaneous using of the serial interface with the software IR-LOG enables the data detection, graphical representation and the parameter settings of the pyrometer.

Examples for applications:
steel, iron, non-ferrous metal, wires, ceramics, rolling, induction heating, soldering, welding, transforming, vacuum furnace etc.

Technical datas:			
Unit types	**KTRD 1465**		
Target marking	light beam aiming device green LED		
Temp. measuring ranges:	MR 1: 100 - 800°C 212 - 1472°F	MR 2: 150 - 1200°C 302 - 2192°F	MR 3: 200 - 1400°C 392 - 2552°F
Response time (t90)	5 ms	<0,5 ms	
Spectral range	2,1 µm		
Measuring uncertainity	0,5% of meas.value in °C ± 1°C (ε = 1, $T_{amb.}$ = 23°C, T_{95} = 1s)		
Reproducibility	0,1% of meas.value in °C ± 1°C (ε = 1, $T_{amb.}$ = 23°C, T_{95} = 1s)		
Emission factor ε	100 - 10 % adjustable at the unit or through interface		
Analog output	0 - 20 mA or 4 - 20 mA , load max. 500R		
Part measuring ranges:	free adjustable within the measuring range		
Resolution	< 0,1% analog output, < 0,1°C at interface		
1 limit output (open coll.)	24 V DC / max. 100 mA		
Max.reading memory	max.memory, double memory,adjustable time and threshold value, erasing after time, external contact, by software, after new meas.part		
Interface	RS 232 isolated ± 50 V or RS 485 isolated 2500V**RMS** options: PROFIBUS, PROFINET, Ethernet, Ether**CAT**, USB 2.0		
Software IR-LOG	data recording, graph.representation, setting of pyrometer parameters		
adjustable parameter with Software IR-LOG	emissionfactor,switching output,analog output, part meas.range, °C/°F, max.memory, average value, light beam aiming device switchable		
Fiber optic	length 1800mm, bend radius min. 40 mm, (other length on request)		
Objectives	for accommodation to the measuring application an extensive selection of objectives are available		
Working temperature	pyrometer 0-50°C (32-122°F), fiber optic, optic system up to 150°C(302°F)		
Stock temperature	- 10°C - + 70°C (14-158°F)		
Temperature sensitivity	0,05 % / °C		
Humidity tolerance	35 - 85 % RF (non condensing)		
Operating voltage	24 V DC ± 10 % or 18 V AC ± 10 % < 160 mA		
Unit connection	12-pole plug-connector		
Dimensions: H / W / D	54 x 54 x 147 mm (2,13 x 2,13 x 5,79 inch) ALU-case		
Weight	0,6 kg (1,32 lbs)		
Protection grade	IP 65		
Option	built in digital display		

mechanical assembly	**electrical assembly**	
Execution in cooling case	**AED 1012 electr.process unit**	**digital display (built in-execution)**
Blowing device	**AED 1012-C PID controller**	**connection cable 12-pole**
Mirror 90°	**AED 1012-PC Program controller**	**line scanner SC 1000 / SC 1012**
Mounting parts	**power supply 100-270VAC - 24 VDC**	**PC-Box (USB – connection set)**

objective for fiber optic pyrometer

fix-focus
M12x1

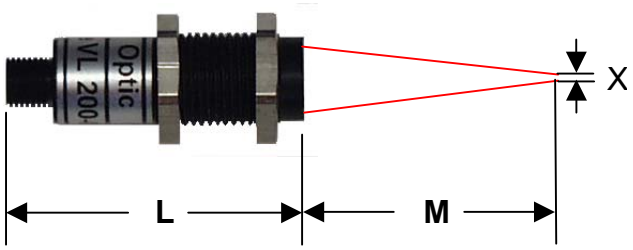

optic type	M / mm	L / mm	target size X Ø / mm	
VL 50-M12	50	38	fiber 0,2mm	0,7mm
			fiber 0,4mm	1,4mm
			fiber 0,6mm	2,0mm
VL 100-M12	100	40	fiber 0,2mm	1,0mm
			fiber 0,4mm	2,0mm
			fiber 0,6mm	3,0mm
VL 150-M12	150	38	fiber 0,2mm	1,4mm
			fiber 0,4mm	2,7mm
			fiber 0,6mm	4,0mm
VL 200-M12	200	38	fiber 0,2mm	2,0mm
			fiber 0,4mm	4,0mm
			fiber 0,6mm	6,0mm

---

vario-focus
Ø 18mm

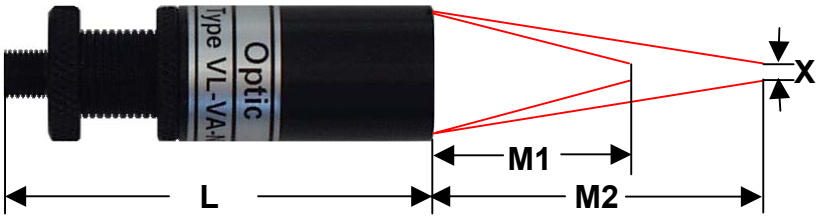

target size X: $\frac{\text{focusing distance M mm}}{\text{distance ratio D}}$ par ex. $\frac{\text{M = 150mm}}{\text{D = 75}}$ = 2,00 mm Ø

optic type	M1 / mm	M2 / mm	L / mm	distance ratio D	
VL-VA-N	65	160	46 - 56	fiber 0,2mm	138
				fiber 0,4mm	69
				fiber 0,6mm	46
VL-VA-T	100	5000	46 - 56	fiber 0,2mm	150
				fiber 0,4mm	75
				fiber 0,6mm	50

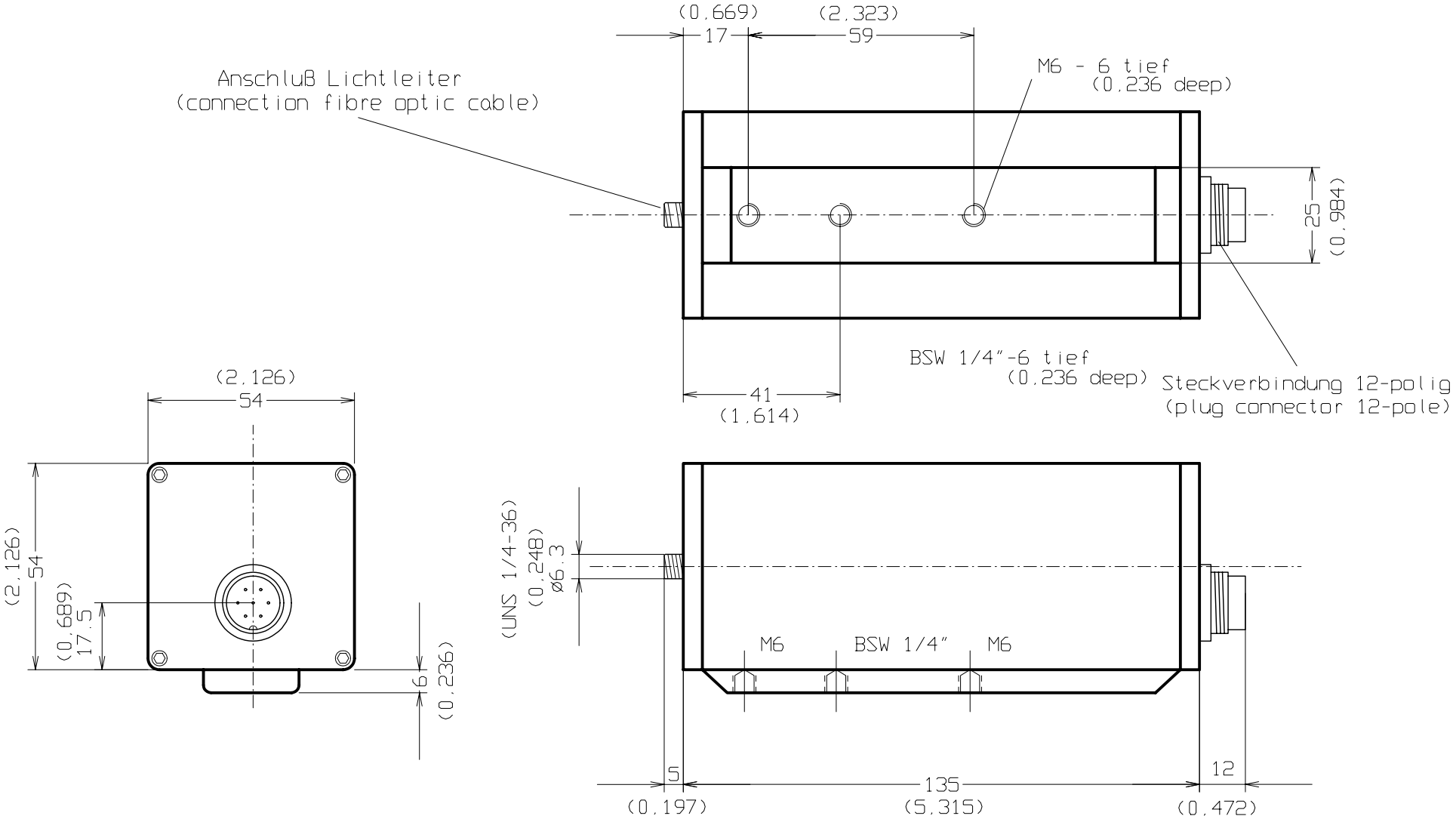

(xxx) - Maße in Zoll
(dimensions inch)

							Maßstab 1:1
					Datum	Name	STANDARDGEHÄUSE (standard case)
				Bearb	25.02.10	Schlotterb.	KTRD 1400-1 Lichtleiteranschluß SMA
				Gepr			(connection fibre optic cable SMA)
				Norm			
				100204			Blatt
Zust	Änderung	Datum	Name				Bl.