GRUBATEC
MESS- UND REGELTECHNIK

CLIMATE TRANSMITTER PFT28

Wall-mounted version

- **Measuring temperature and relative humidity with a „single-chip“-sensor**
- **Calculation and display of dew point temperature, enthalpy, wet bulb temperature and absolute humidity**
- **Digital transmission from sensor to the evaluation electronics**
- **Fast response time**
- **Exchange ability of sensor without recalibration**
- **Alphanumeric LCD-indicator for: temperature, relative humidity, dew point temperature, absolute humidity, wet bulb temperature and enthalpy**
- **Analog outputs 0/2...10 V or 0/4...20 mA**
- **Supply voltage 15...30 Vdc or 24 Vac**
- **Operational use humidity 0...100 % (transient condensation possible)**
- **Operational use temperature -30...+50 °C**
- **Plastic housing, protection class IP 54; UL 94 HB**

The transmitter PFT28 converts the measured variables temperature and relative humidity into the measured variables: dew point temperature, absolute humidity, wet bulb temperature and enthalpy.

Output 1 supplies the temperature signal while Output 2 can be assigned to one of four other measured variables. The second measured variable is selected by a two-pole DIP switch.

Measured variable, measured value and unit are displayed on a two-line alphanumeric display.

Two PFT28 versions are available:
A room sensor for wall mounting and a duct sensor for installation in a ventilation duct. In both versions, the sensor tube is mounted directly to the chassis. With a jumper, the output signals can be switched from 0/2...10 V to 0/4...20 mA. The device is powered with 15...30 Vdc or 24 Vac.

Dimensions (mm) PFT28R as room sensor

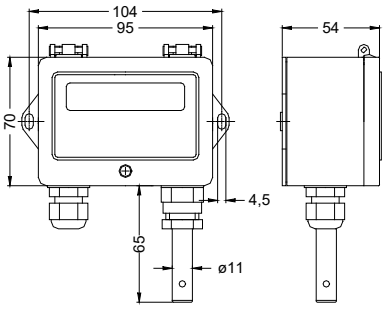

Dimensions (mm) PFT28K as duct sensor

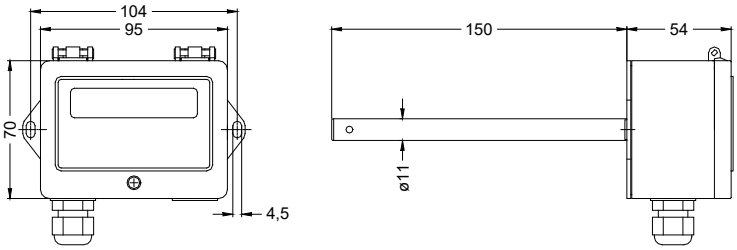

Connections

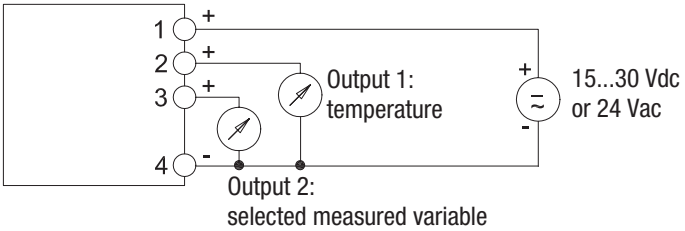

Mounting flange MF-M90

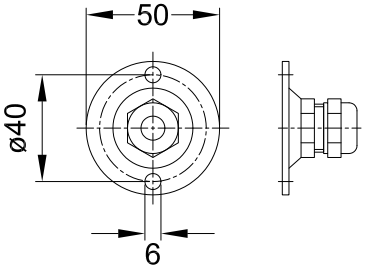

Connecting terminal:

1+ 4- Supply voltage 15...30 Vdc or 24 Vac (±15%)
2+ 4- Output 1: 0/2...10 V or 0/4...20 mA
3+ 4- Output 2: 0/2...10 V or 0/4...20 mA

TECHNICAL SPECIFICATIONS:

Operating mode:	Messuring mode
Medium:	Temperature and Humidity
Sensor:	Single-chip humidity and temperature sensor with digital signal transmission and calibration memory on the chip
Measuring unit:	Temperature in °C; relative humidity in %
Output signal 1:	Temperature
Output signal 2:	Relative humidity, dew point, wet bulb temperature, enthalpy; (Special - Absoulte humidity)

HUMIDITY

date: March 2024

Grubatec AG • Wölferstrasse 5 • 4414 Füllinsdorf • phone +41(0)55 617 00 80
www.grubatec.ch • Email: info@grubatec.ch

CLIMATE TRANSMITTER PFT28

GRILLO

	Output 1: TEMPERATURE	
Resolution:	14 bit	
Response time:	Approx. 20 seconds	
Characteristics:	Linear	
	Standard Sensor:	Sensor with narrower tolerance:
Tolerance:	±0,1 °C	±0,1 °C
Reproducibility:	±0,1 °C	±0,1 °C
	±0,5 °C at 25 °C	±0,3 °C at 25 °C
	±2,0 °C at -40 °C	±1,5 °C at -40 °C
	±3,0 °C at +120 °C	±2,0 °C at +120 °C
Measuring ranges:	-30...+50 °C	
	Output 2: SELECTABLE	
Resolution:	12 bit	
Response time:	Approx. 4 seconds (63 %-time, slightly moving air)	
Characteristics:	Linear (digital linearization)	
Long-term stability:	Typical < 1 % r.h. / year	
	Standard Sensor:	Sensor with narrower tolerance:
Tolerance:	±0,1 % r.h.	±0,1 % r.h.
Reproducibility:	±0,1 % r.h.	±0,1 % r.h.
	±3,5 % r.h. at 30...70 % r.h.	±2,0 % r.h. at 10...90 % r.h.
	±5,0 % r.h. at 0...29 % r.h.	±4,0 % r.h. at 0...9 % r.h.
	±5,0 % r.h. at 71...100 % r.h.	±4,0 % r.h. at 91...100 % r.h.
Measuring ranges:	Temperature: T = -30...+50 °C, 0...50 °C, 0...100 °C;	
	Relative humidity: r.h. = 0...100%;	
	Dew point: dp = -30...+50 °C;	
	Wet bulb temperature: wbt = -30...+50 °C;	
	Enthalpy: E = 0...200 kJ/kg;	
Special measuring range:	Absolute humidity: a.h. = 0...50 g/kg	
Measuring range selection:	4 selectable measuring ranges via DIP switch	
	PHYSICALLY:	
Housing:	Ultramid with hinged ABS cover; Attached sensor tube for recording the sensor	
Protection class:	IP 54 according to EN 60529; UL 94 HB	
Dimensions:	95 x 70 x 54 [mm] (WxHxD)	
Storage temperature:	-25 ... + 60 ° C	
Operating temperature:	Sensor: -40 ... + 120 ° C	
	Electronics: -10 ... + 50 ° C	
Weight:	Approx. 300 g	
Connection head:	Plastic ABS	
Electrical connection:	7 Connection terminals	
Channel sensor	Sensor tube: stainless steel, 11 mm ø	
	Cable gland: M16 x 1.5	
	Mounting flange for attachment to the duct	
Outdoor sensor	Sensor tube: double-walled sensor tube with wall holder	
	Cable gland: M16 x 1.5	
	Mounting on the wall	
Room sensor	Plastic housing for mounting on a flush-mounted switch box or surface-mounted wall mounting	
	ELECTRONIC:	
Power supply:	15...30 Vdc; 24 Vac (±15%)	
Output current:	0/2...10 V or 0/4...20 mA with DIP switch and jumper	
	CONFORMITY:	
EMC:	EN 61000-6-2, EN 61000-6-3, CE-mark	
RoHS:	according RoHS-directive 2011/65/EU	

	Item no.
Climate transmitter PFT28K as duct sensor with montage flange	**7400**
Climate transmitter PFT28R as room sensor	**7410**
Special assignment of the measured variables to output 2	**7399**
Output 1 & Output 2 are pretended in case of order by customer!	
Climate transmitter PFT28K as cable sensor	**7422**
Exchangeable sensor, pluggable, permanently calibrated	**72190**
Exchange sensor with restricted tolerance	**72191**
Surcharge for sensor with restricted tolerance	**72192**
Special length of the sensor tube	**72193**
Optional sensor protection with sinter filter	**72194**

date: March 2024

Grubatec AG • Wölferstrasse 5 • 4414 Füllinsdorf • phone +41(0)55 617 00 80
www.grubatec.ch • Email: info@grubatec.ch